INSTALL INSTRUCTIONS

2025+ RAM 4500-5500 Cab Chassis – 6” Lift Rear - Overlander



KIT #10039931

KELDERMAN MANUFACTURING

2686 HIGHWAY 92 EAST OSKALOOSA, IOWA 52577

INFO@KELDERMAN.COM 1-800-334-6150

TABLE OF CONTENTS

- Kit Numbers.....(3)
- Introduction.....(4)
- Safety.....(5)
- Product Owner Responsibilities.....(6)
- Disassembly.....(7-11)
- Kit Installation.....(12-29)
- Kit Drawings.....(30-31)
- Notes.....(32)
- Contact Information.....(33)



Kit Numbers

- This installation manual covers the following air ride kits.

Kit Number	Description
10039931	Kit - 6" Lift Rear - Overlander - 2025+ Ram 4500-5500 Chassis Cab



Introduction

Important

- It is important that the entire installation instructions be read thoroughly before proceeding with installa- tion.
- If your kit was ordered raw, open every box and locate all parts. There are several smaller bushing pieces and bolts that are packaged separately inside the main box.

Product Installer Responsibilities

- Installer is responsible for installing this product in accordance with Kelderman Mfg. Inc. specifications and installation instructions.
- Installer is responsible for providing proper installation of vehicle components and attachments as well as required or necessary clearance for suspension components, axles, wheels, tires, and other vehicle components to ensure a safe and sound installation and operation of this product.

Definition of Terms

- **Warning:** Indicates a potentially hazardous situation which, if not avoided, could result in death or serious injury.
- **Caution:** A potential hazardous situation may result in property damage.
- **Note:** Provide information or suggestions that help correctly perform a task.
- **Torque:** When italicized "torque" alerts the installer to tighten fasteners to a specified value.

bolt torque chart

Bolt Size	Grade 5 Torque	Grade 8 Torque
1/4"-20	8 *ft-lb*	12 *ft-lb*
3/8"-16	*19 ft-lb*	26 *ft-lb*
3/8"-24	*21 ft-lb*	30 *ft-lb*
1/2"-13	45 *ft-lb*	64 *ft-lb*
1/2"-20	50*ft-lb*	70 *ft-lb*
9/16"-18	70 *ft-lb*	100 *ft-lb*
5/8"-11	90 *ft-lb*	125 *ft-lb*
5/8"-18	100 *ft-lb*	150 *ft-lb*
3/4"-16	175 *ft-lb*	250 *ft-lb*
7/8"-14	275*ft-lb*	400 *ft-lb*

Safety

Your Safety and the Safety of Others is Very Important.

- Read and understand all safety precautions and instructions before installing this product.

CAUTION: Trucks Equipped with Parking Sensors or Other Like Devices.

- Relocation of these devices will alter the field of view. It is the responsibility of the owner to understand how these changes affect the operation of these systems.

WARNING: Components Under Pressure.

- Bleed all pressure from the air system before performing any maintenance or service. Serious injury could occur if components are removed while system is pressurized.

WARNING: Careless Installation Can Result in Serious Injury or Property Damage

- Wear eye protection.
- Disconnect the battery before doing any work on the vehicle.
- Work on flat level ground.
- Ensure truck is properly supported by jack stands. Never work under a vehicle supported only by hydrau- lic jacks.
- Take precautions when lifting product. Due to the size and weight of this product two people are recom- mended for installation.
- Never work directly under the product until it has been securely fastened to the vehicle.
- Avoid sharp, hot, and moving components when routing electrical cables and air lines.
- If drilling, inspect both sides of the surface and remove/relocate any objects located in the way.
- Ensure all bolts are properly tightened before driving.

Product Owner Responsibilities

- Product owner is solely responsible for pre-operation inspection, periodic inspections, maintenance, and use of the product as specified by Kelderman Mfg. Inc. of particular importance is the re-torque of fasteners.
- This re-torque must be performed within 2500 miles of this product being put into service.
- The Kelderman Air Suspension is fully automatic in controlling the height of the chassis when properly installed.
- No Manual Intervention to control air pressure or ride height is needed during normal operation.
- Product owner is responsible for "*down time*" expenses, cargo damage, and all business costs and loss- es resulting from a warrantable failure.

Service Intervals

First 2,500 Miles

- Check Ride Height ± 1/4"
- Check for air leaks around fittings.
- Check for any loose or rubbing hoses and wires.
- Re-torque all hardware.

Every 30,000 Miles

- Check Ride Height ± 1/4"
- Check for air leaks around fittings.

DISASSEMBLY

1. Before doing anything, measure the pinion angle and record it. This is important because you will need to put the axle back to this measurement after installation. See figure 1.

Pinion angle____



Take the following measurements for future reference. These measurements will be used to adjust the suspension after installation.

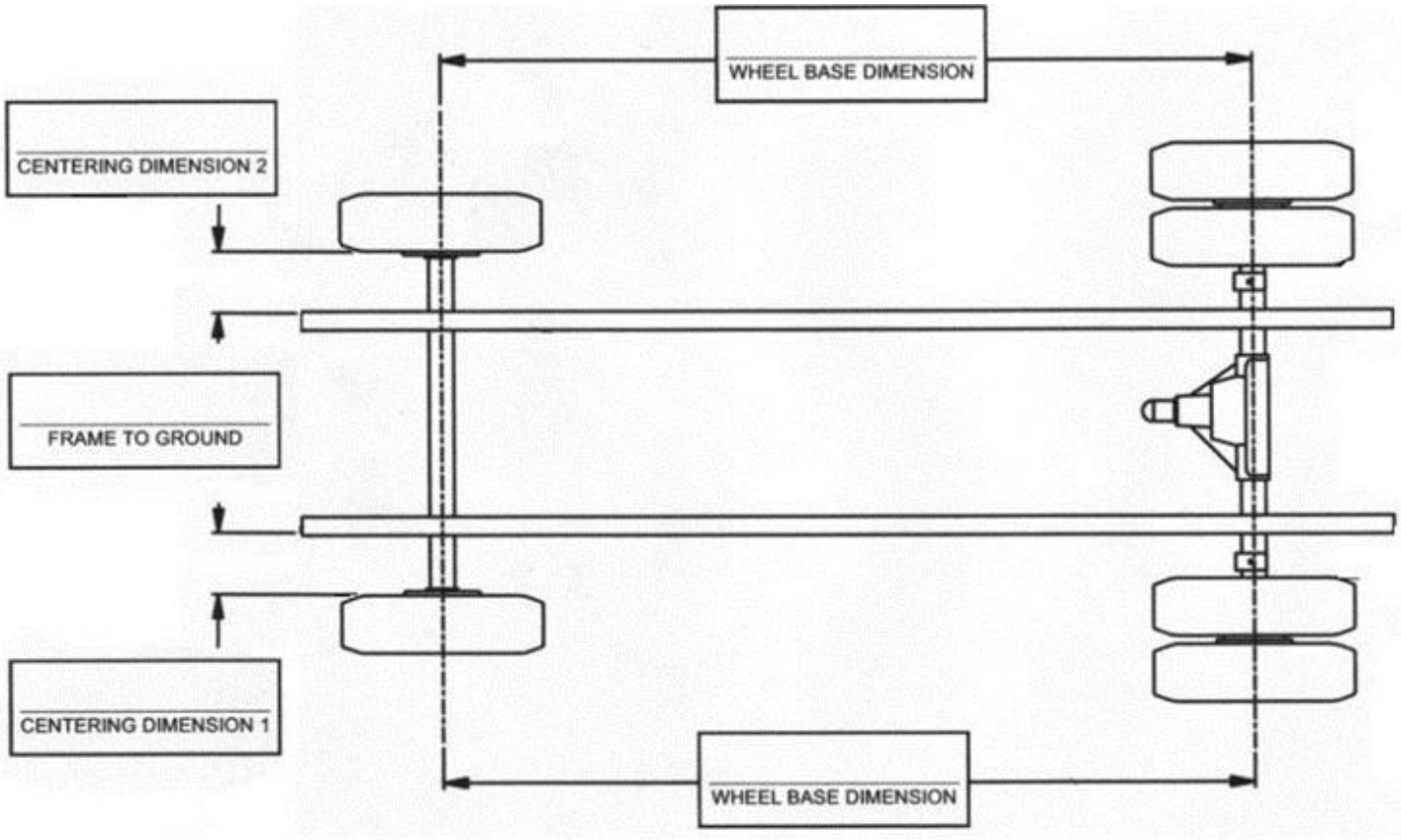

2. Jack the rear of the frame so that most of the tension is off the leaf springs. Place a set of jack stands under the frame, block the tires so that the axle will not move and place a jack stand under the pinion, so it does not rotate. Remove the leaf springs, axle clamps, U-bolts, spring perches, overload pad mounts and shocks You will need to use a torch to cut off the rivets and use a punch to remove the rivets on older models. Newer models use bolts instead of rivets. Use a cut off wheel to remove the overload pad mounts. Make sure that there are no fuel lines, brake lines, or wiring that can be damaged while using a torch. Keep the factory end link mounts installed.

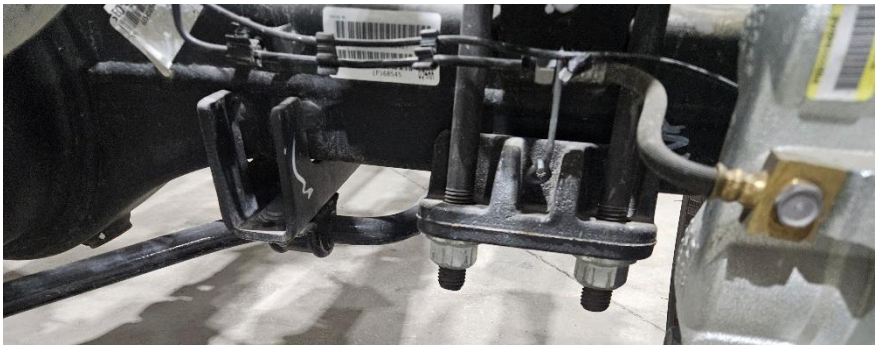



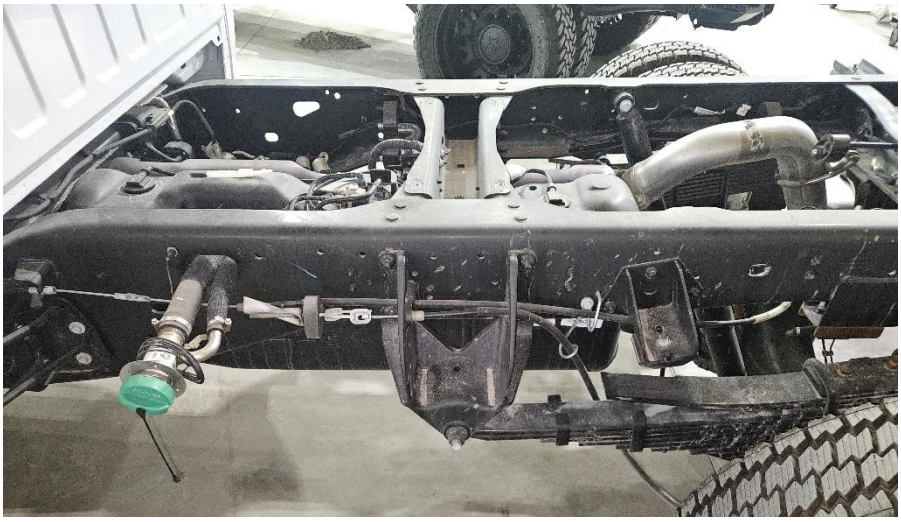





Cut the bump stop bracket with a cut off wheel

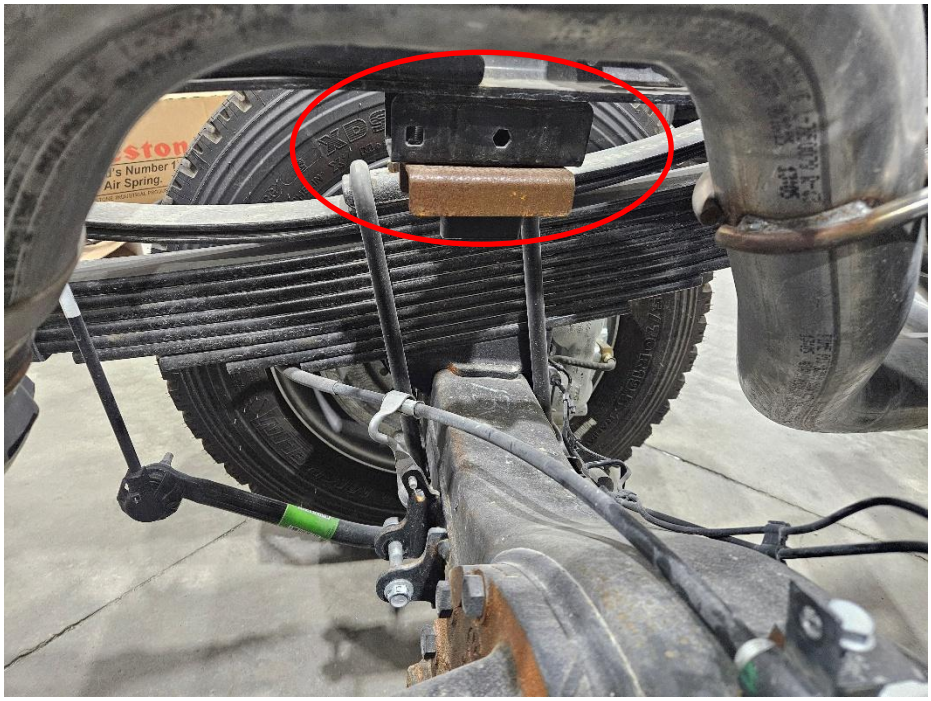

Remove the End Links but keep the factory bracket installed



Keep the upper shock bolts for install

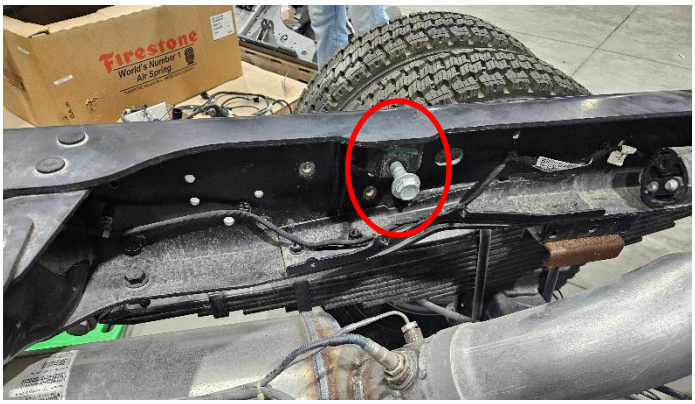

On the driver's side, separate the emergency brake cables. The emergency brake cable will be installed onto the side plate with a bracket in a later step.

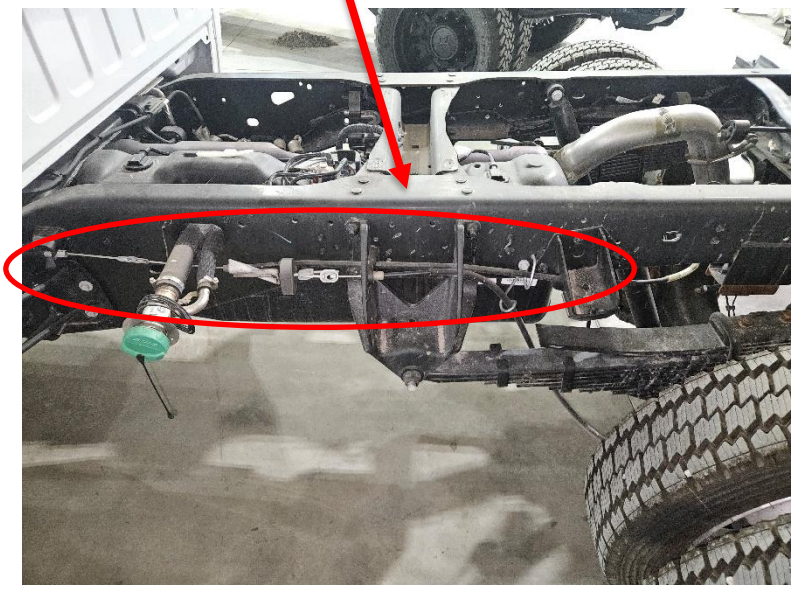

On the top of the axle, cut off the spring perches that are welded to the axle. Also remove the square block that holds the emergency brake cable in place.

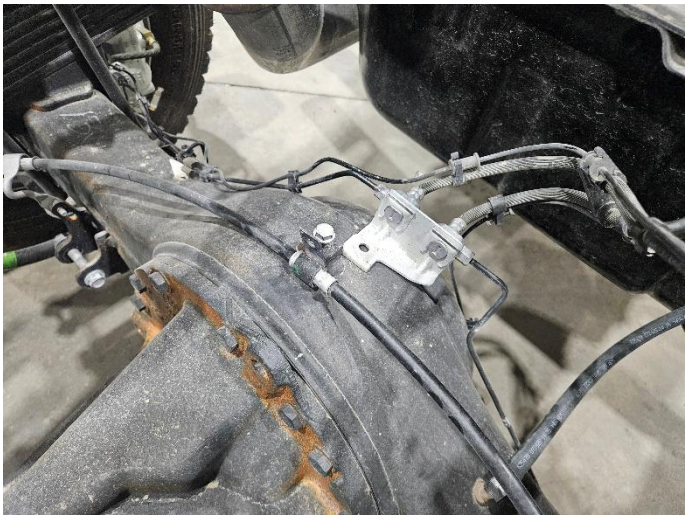

Remove the brake bracket. The brake lines and e-brake cable will be relocated in later steps.

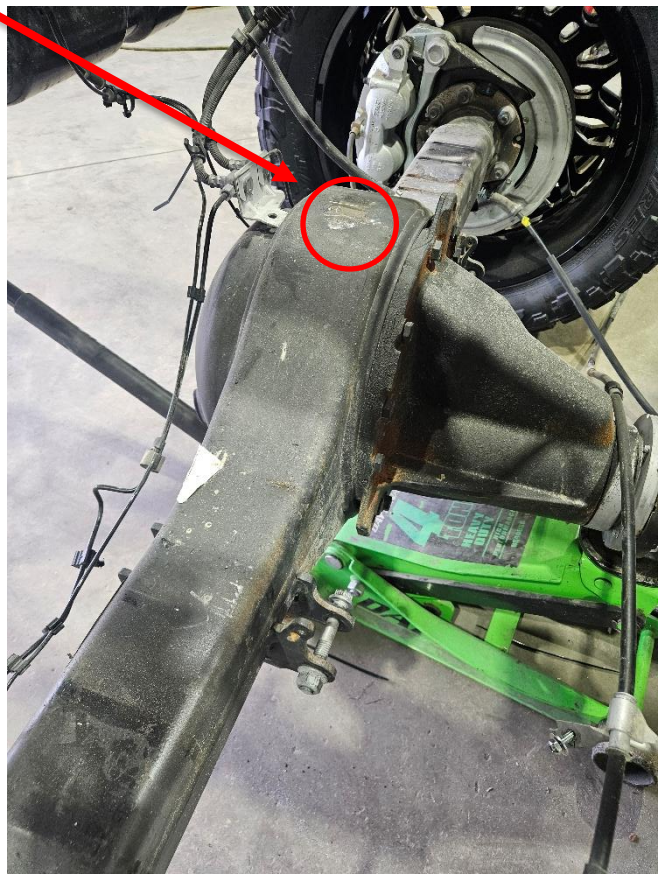

Frame and axle ready for install

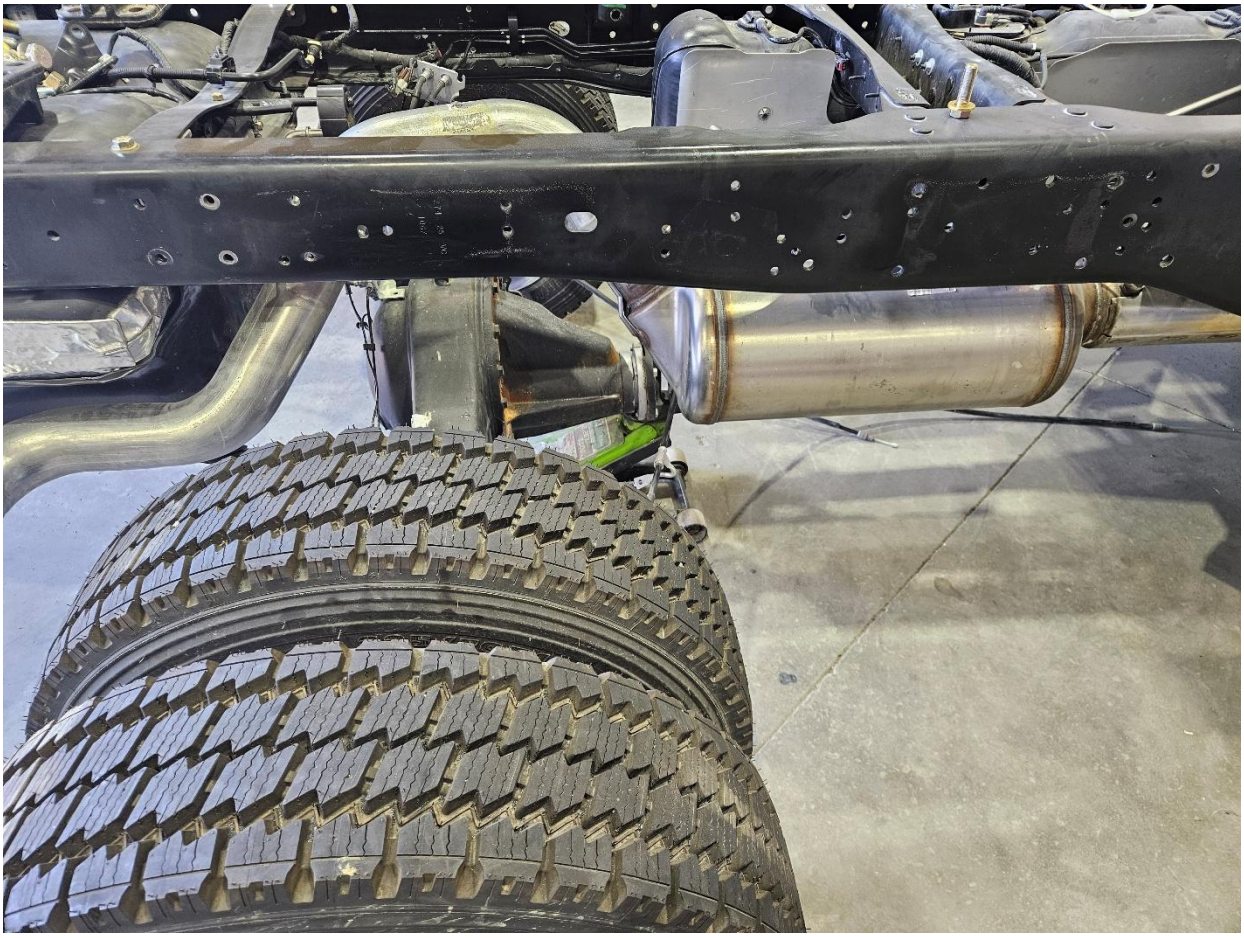

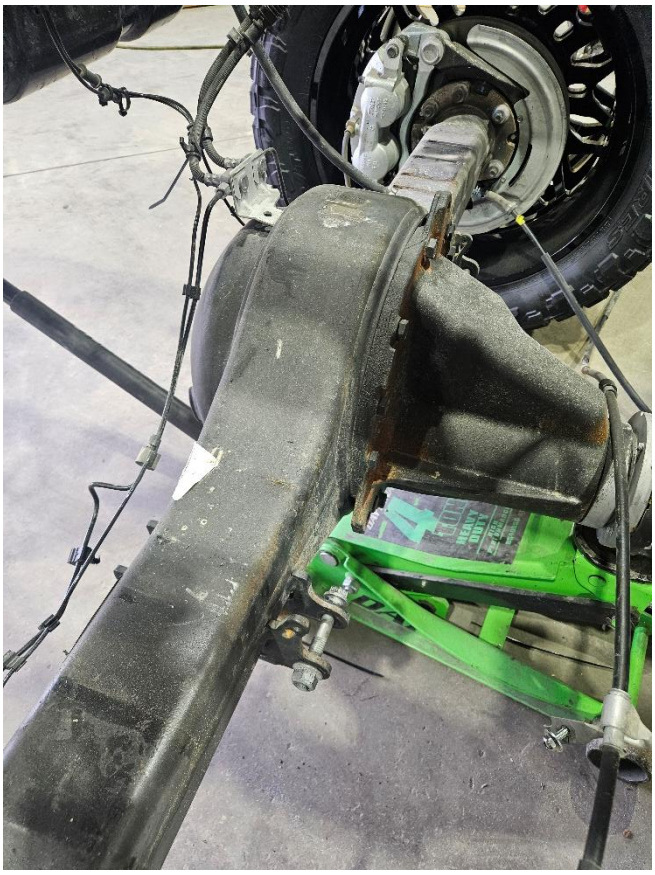

ASSEMBLY

1. Locate the corner braces (#10042147 & 10042132). Before installing you will need to remove the rivets on the top and bottom of the fuel tank crossmember, an Air hammer is recommended. Only do one side at a time. Install the corner braces to the inside of the fuel tank crossmember with ½"-20 x 2" bolts, flat washers and lock nuts, where the rivets were removed.



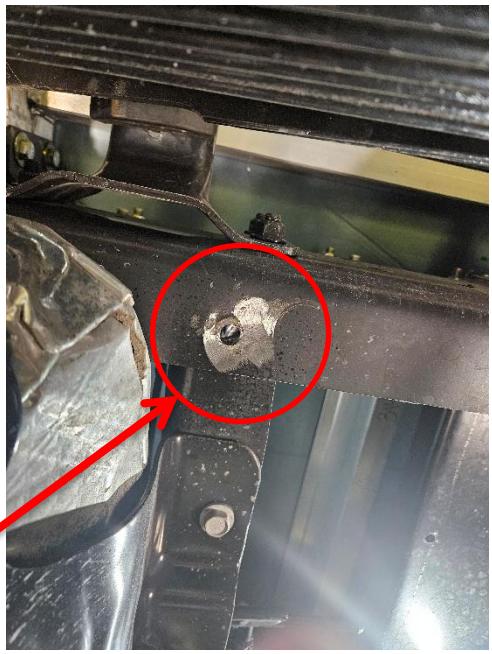

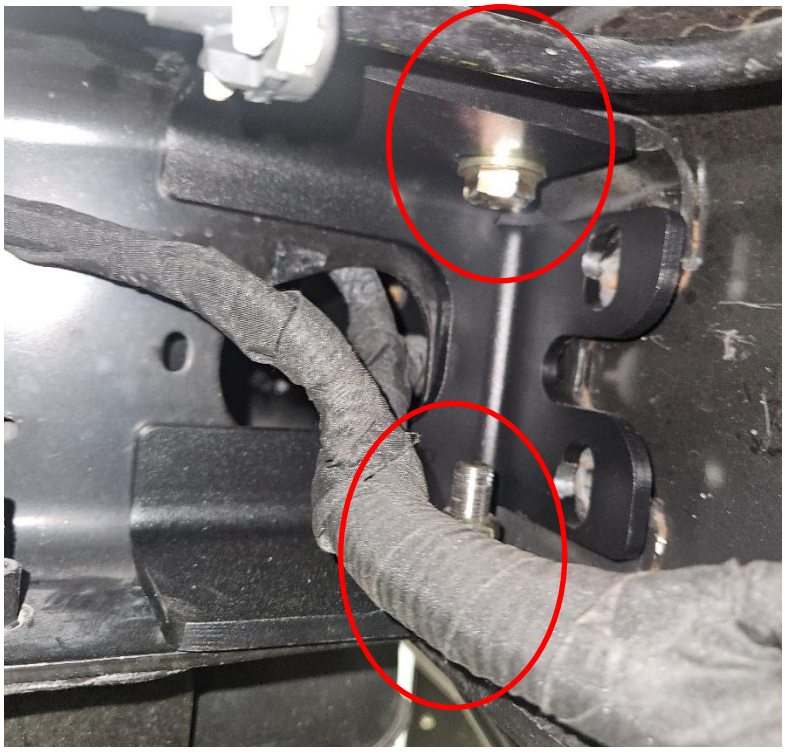

2. Locate the Side Plates (#10041870-DS & 10041916-PS), E-Brake Mount (#10045623-DS Only) and Sensor Brackets (#10045510-DS & 10045511-PS). Attach the side plates using the hardware shown in the diagram below:





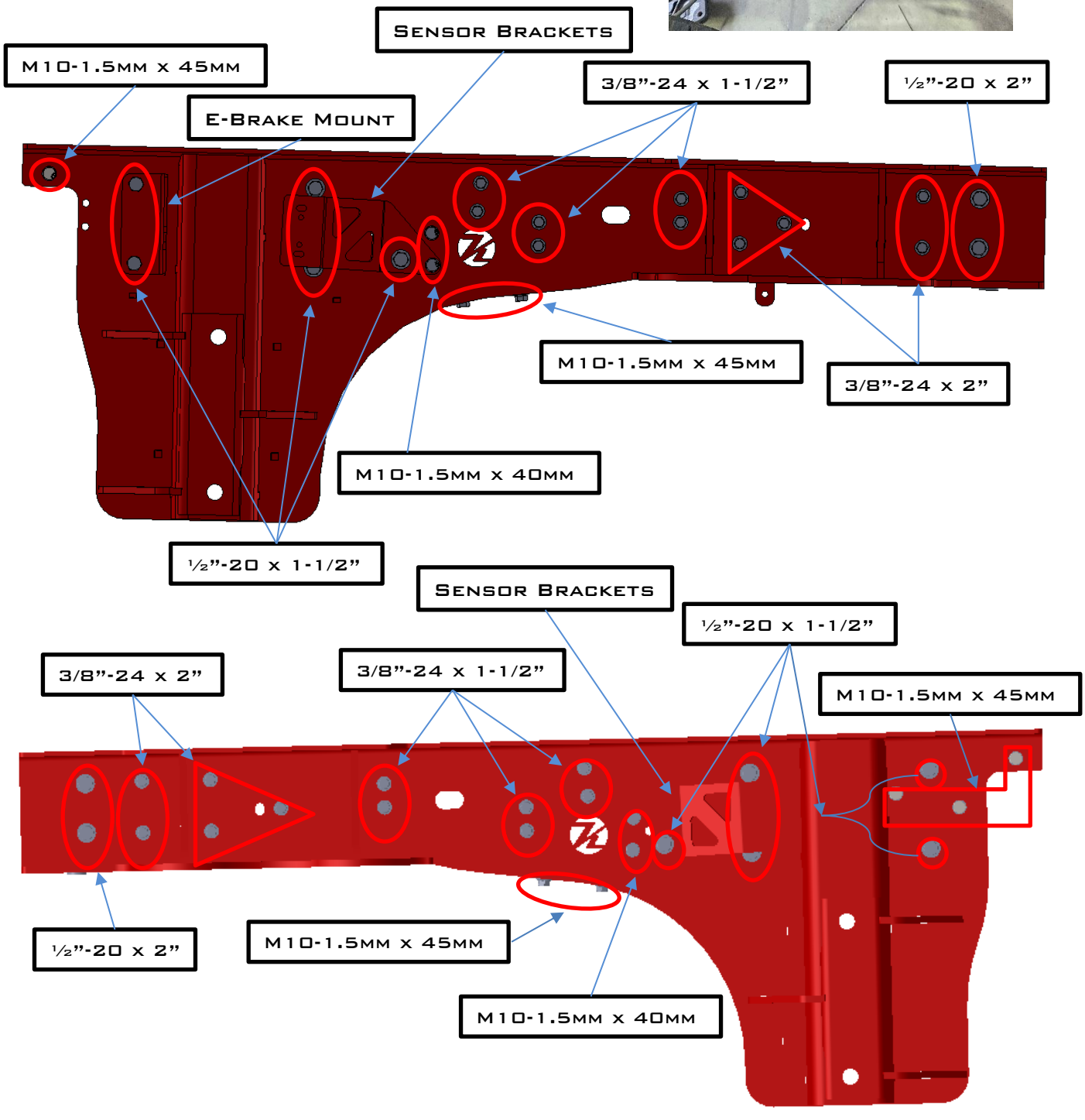

3. Locate the Upper Watt Link Weldments (#10042028-DS & 10042044-PS). These will attach to the inner side of the frame with 3/8”-24 x 2” bolts, flat washers and lock nuts and share bolts with the side plate.

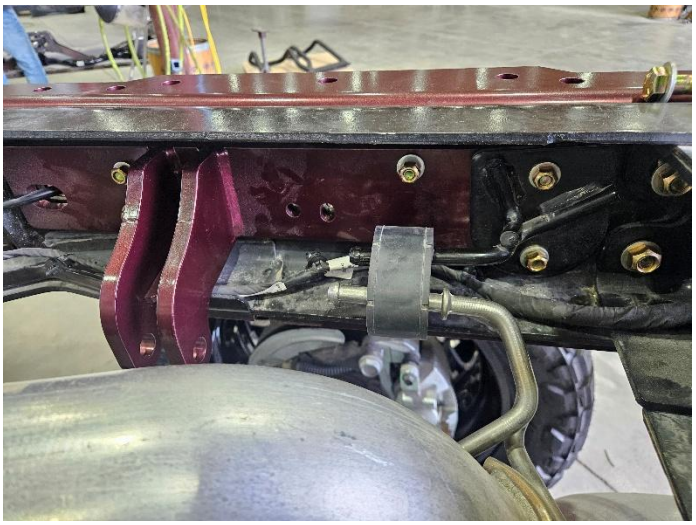

10042028-DS

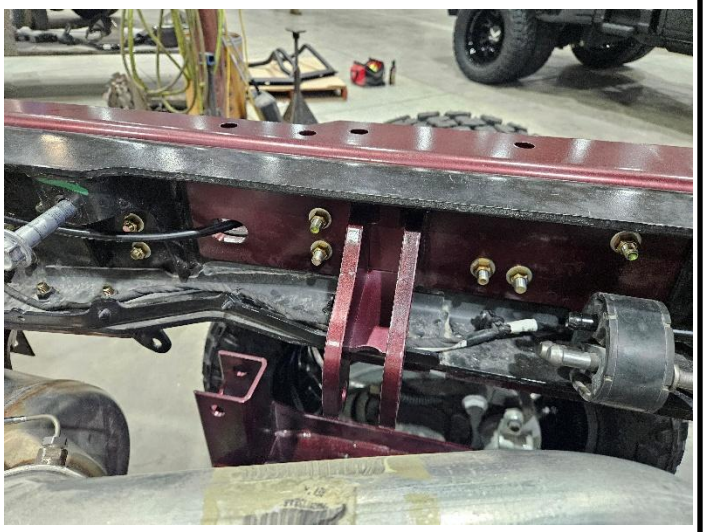

10042044-PS

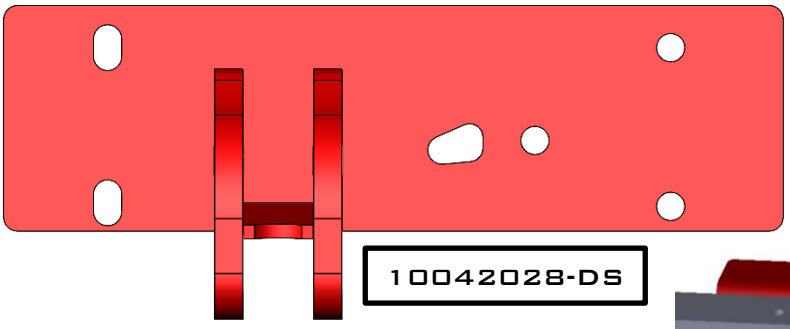

10042028-DS

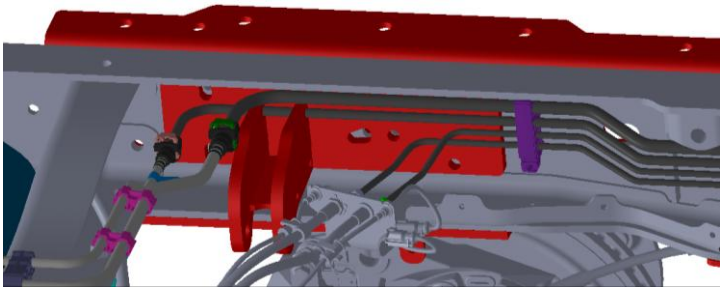

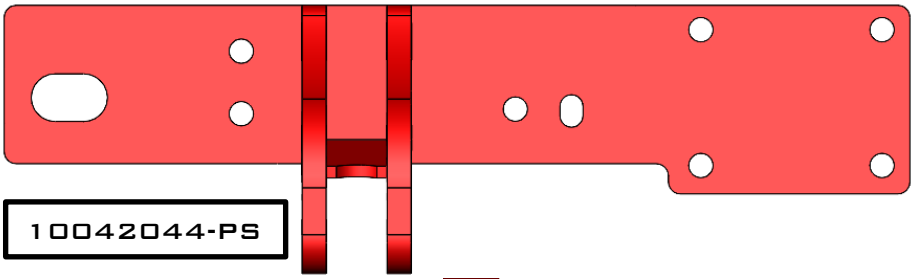

10042044-PS

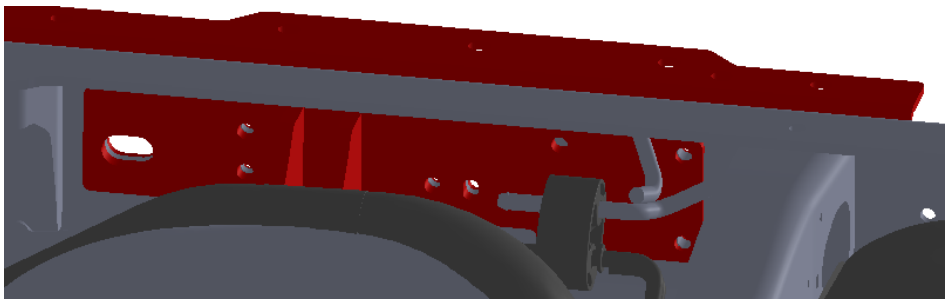

4. Locate the Lower Bag Mount Weldments (#10041884-DS & 10041898-PS) and Axle Clamp Weldments (#10045736). Place the weldment on the axle with the trailing arm tube facing toward the front of the truck. The axle clamps will go on the underside of the axle and fastens to the lower bag weldment with 7/8”*14 x 7” bolts, flat washers and lock nuts. Do Not Tighten yet.

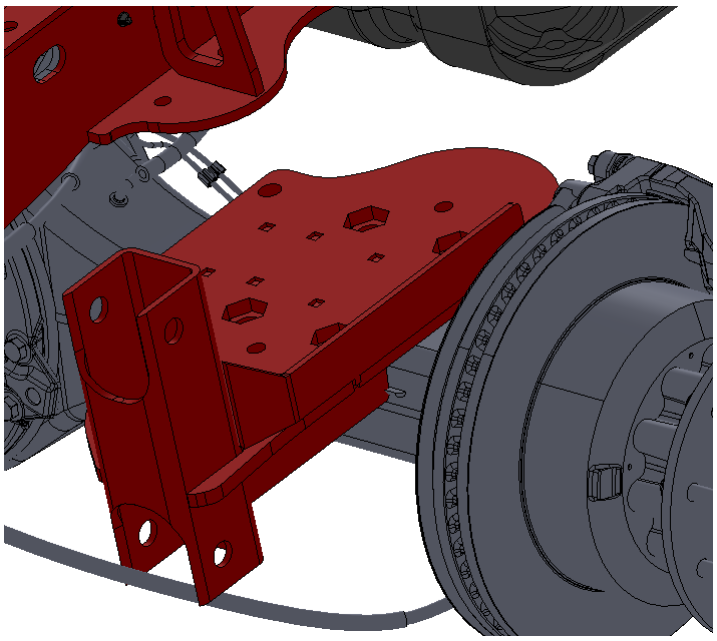

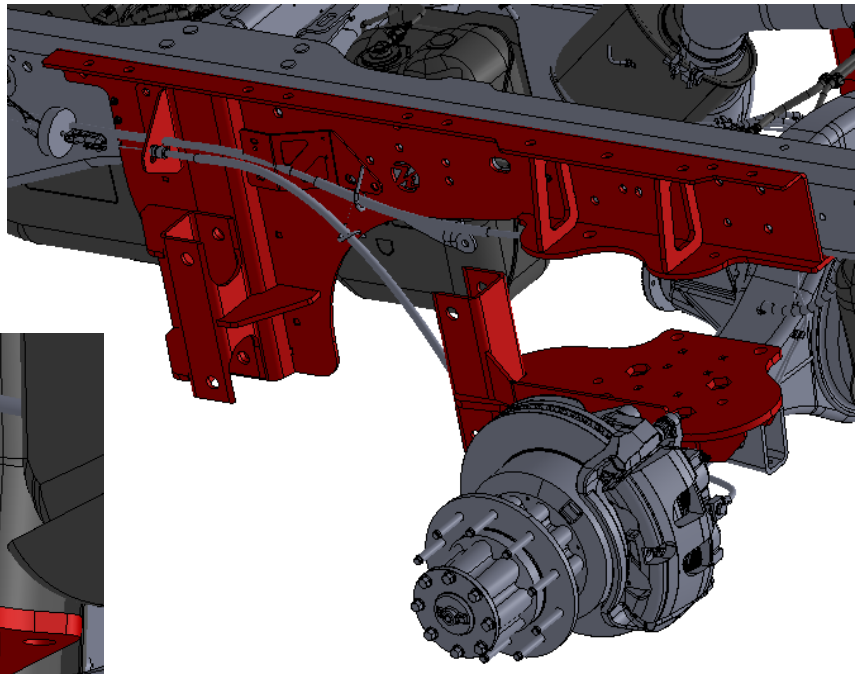

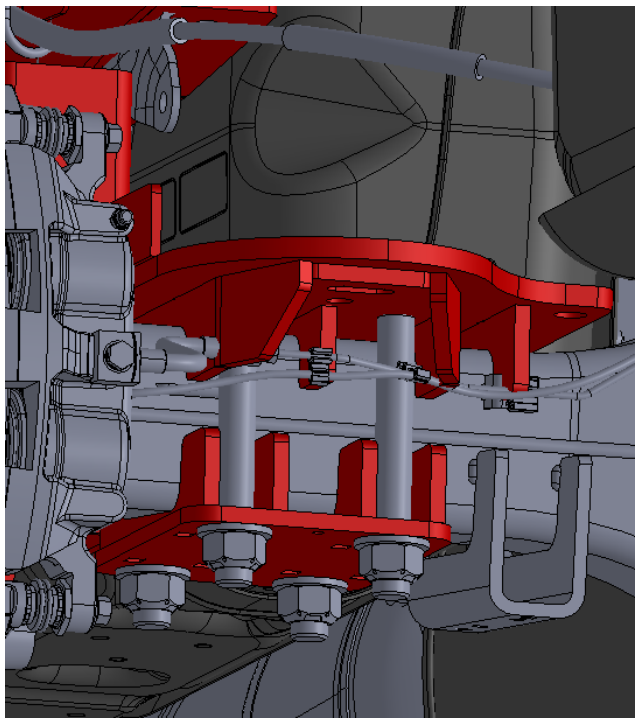

5. Locate the Watt Link Crossmember parts shown below in the diagram. Press the poly bearings into the watt link before installing to the crossmember weldment. The pivot center will install from the top of the crossmember down through the watt link. Fasten down the keeper flag with 3/8"-16 x 1" bolts and then install the manufactured washer over the flag with ½"-13 x 1" bolt. Make sure the watt link can move freely back and forth about the axis before proceeding. You will install the 5/8"-11 x 3" bolts and bolt spacer when installing the watt link arms.

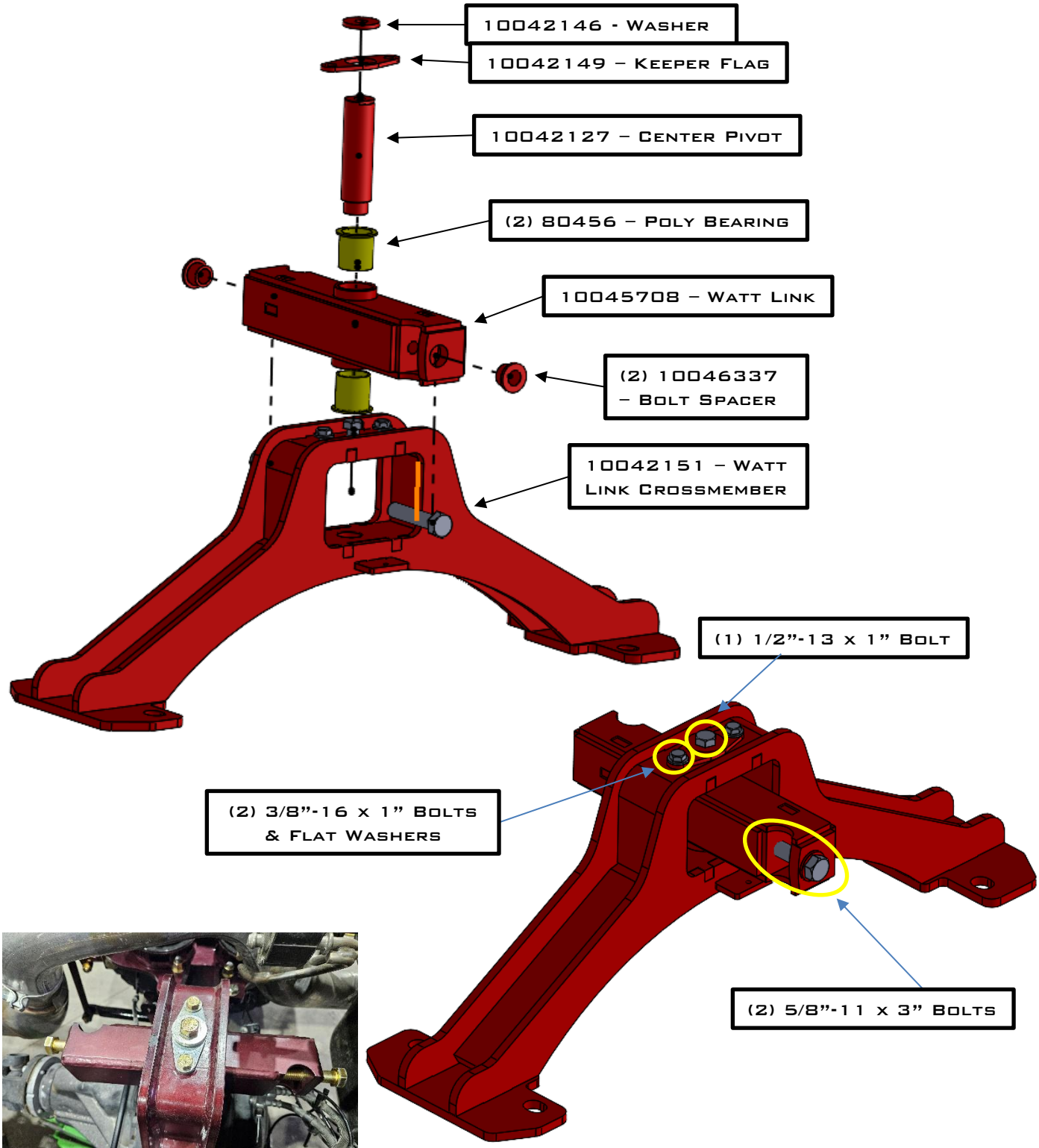

6. Install the Watt Link Crossmember to the lower bag mounts with (4) ¾"-16 x 2" bolts, flat washers and lock nuts. Once you have attached the crossmember to the lower bag mounts, set the lower bag mounts in place by measuring from the outside of the lower bag mount to the inside of the brake caliper. This measurement should be approximately 4-9/16" (4.565")

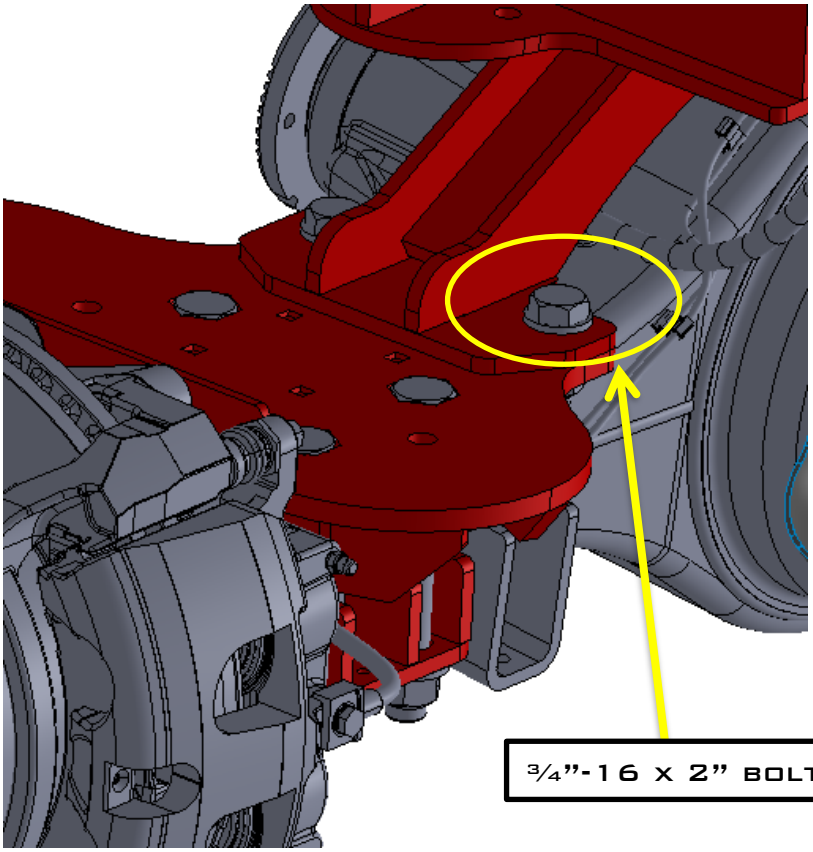

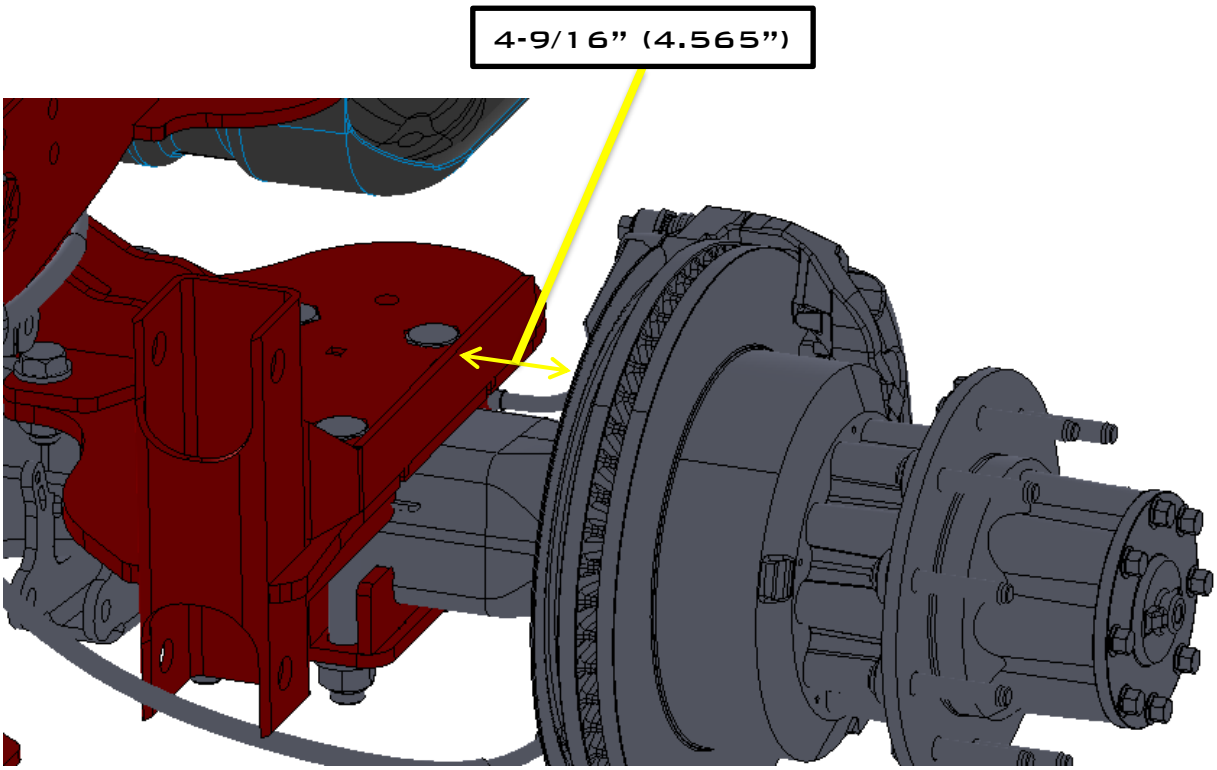

7. Un-hook the factory Brake Line fittings. Attach the lines removed to the bracket on the rear of the watts link. They will attach to the provided brake lines to extend the line.

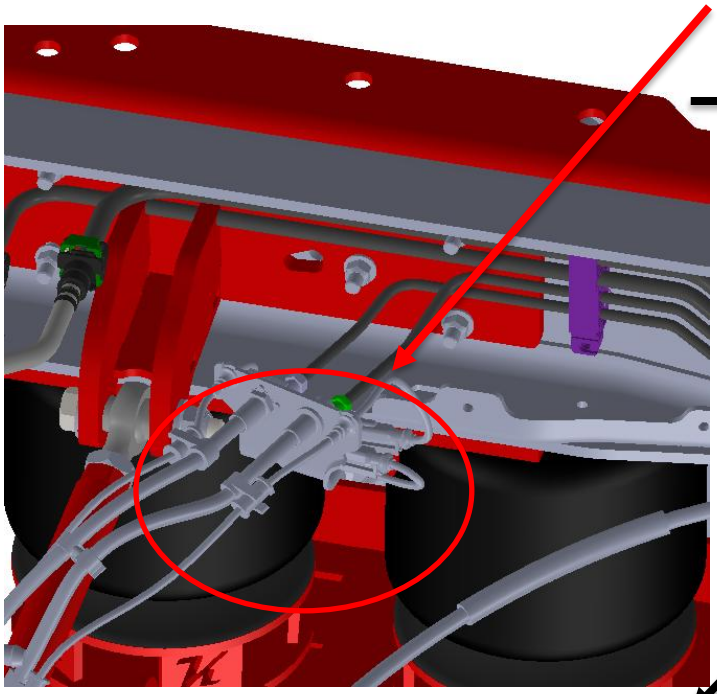

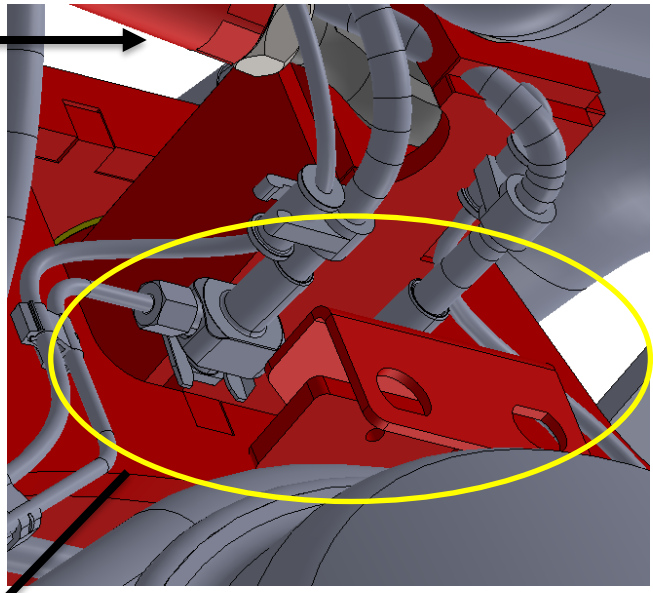

Remove the retainer clips from the brake line fittings and install the fittings to the brake line relocation bracket. You will need to flatten the retainer clips before reinstalling them on the fittings.

Attach the other end of the factory brake line to the brake line mount on the fuel tank crossmember.



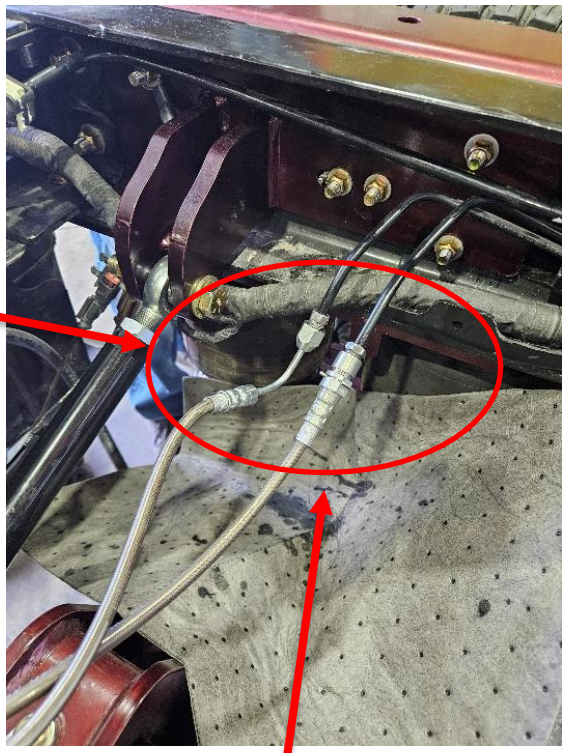

Attach the other end of the manufactured brake lines to the factory steel lines on the frame

8. Locate the Watt Link Bars (#10042035), RHT Heim (#10045717), LHT Heim (#10045718) and RHT & LHT Jam Nuts (#13208 & 13209). Attach to the upper watt link mount with 5/8”-18 x 3-1/2” bolts, flat washers and lock nuts. Attach the other end to the watt link with 5/8”-11 x 3” bolts and bolt spacers.

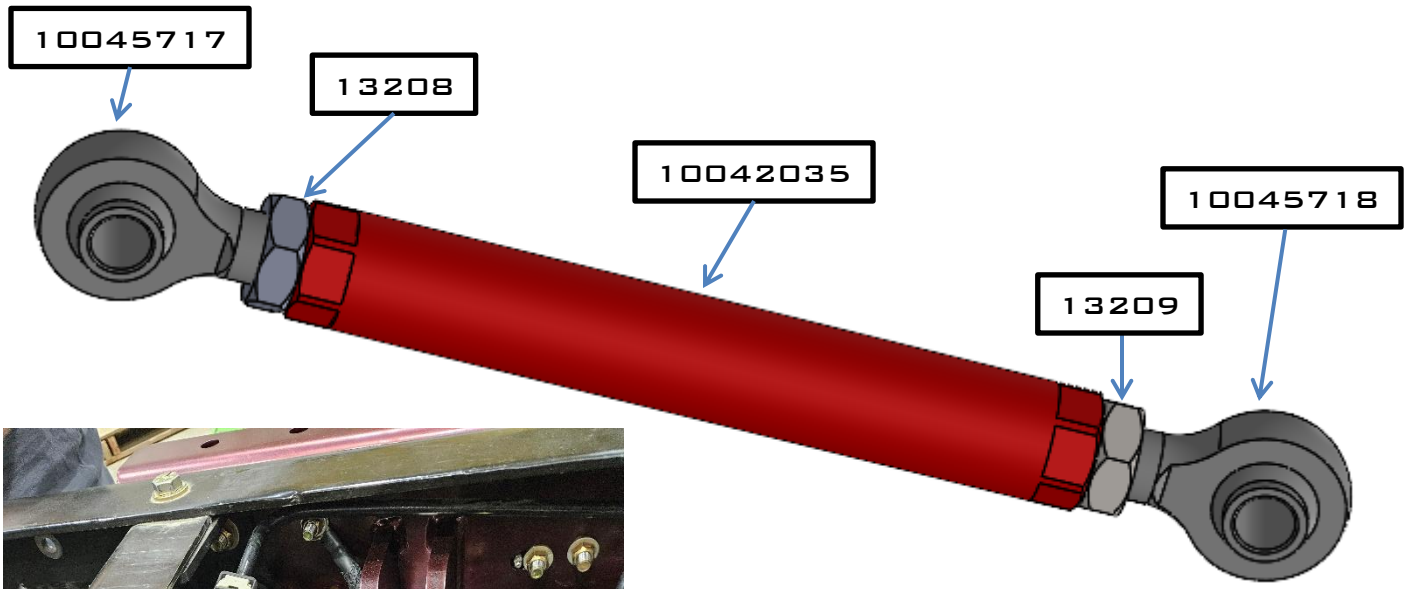

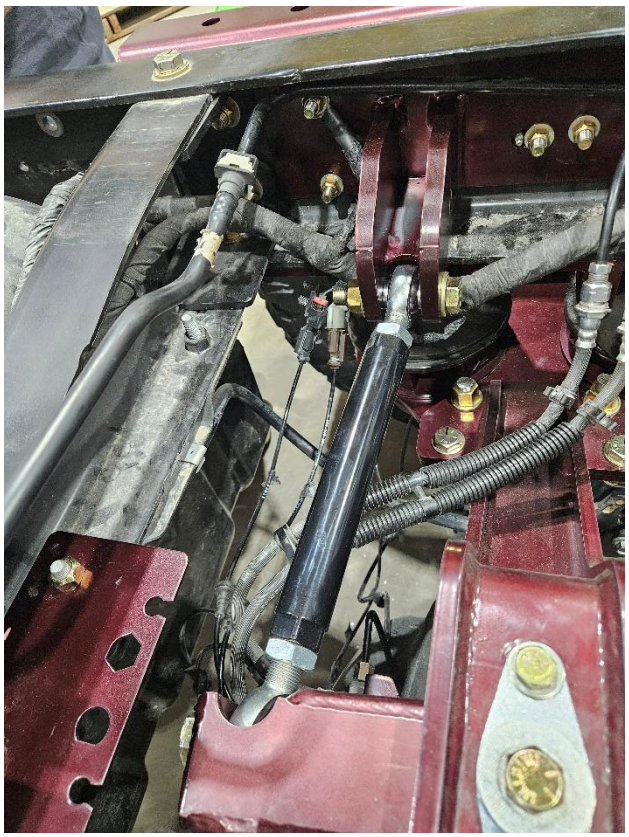

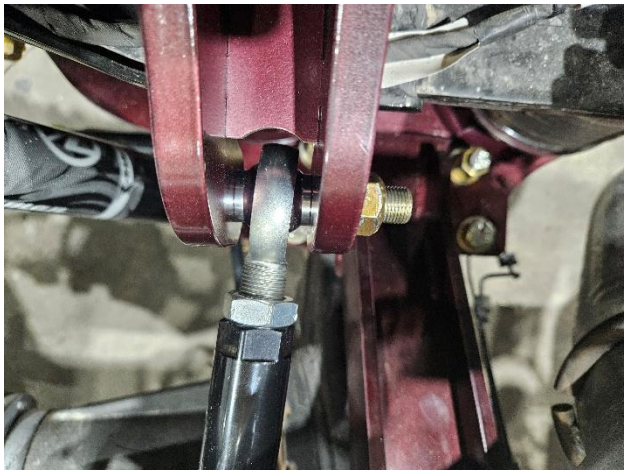



9. Locate the Risers (#10009346) and Air Bags (#5323) and place the risers on the lower bag mount and then the air bag on the riser and attach with ½"-13 x 7-1/2" bolts, flat washer, split lock washers and star washers through the bottom of the lower bag mounts through the riser to the bag. Lower the truck down until the side plates fit in the bag studs then fasten with ½" hex nuts, ¾" jam nuts, flat washers and split lock washers.

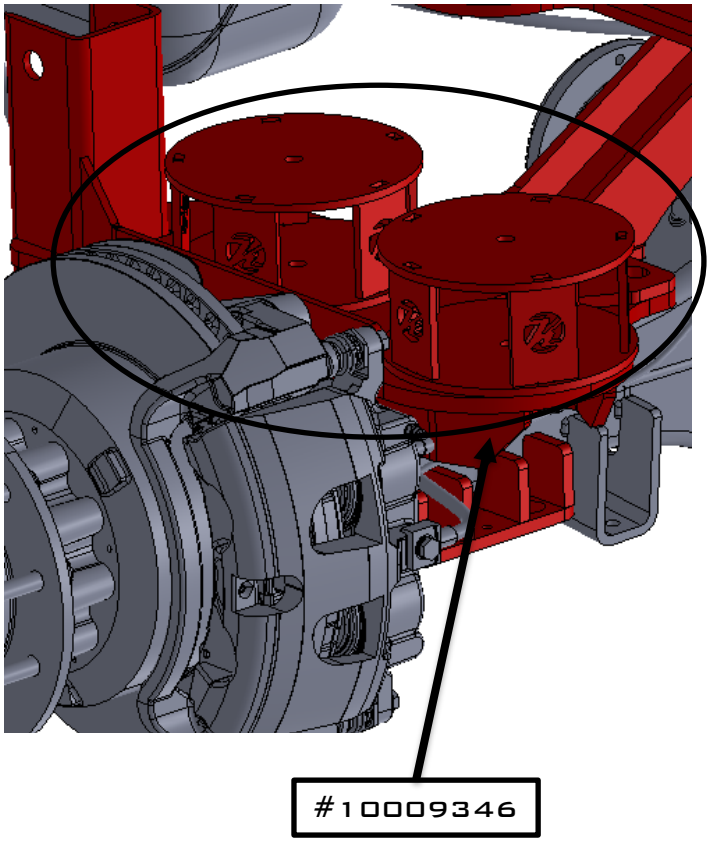

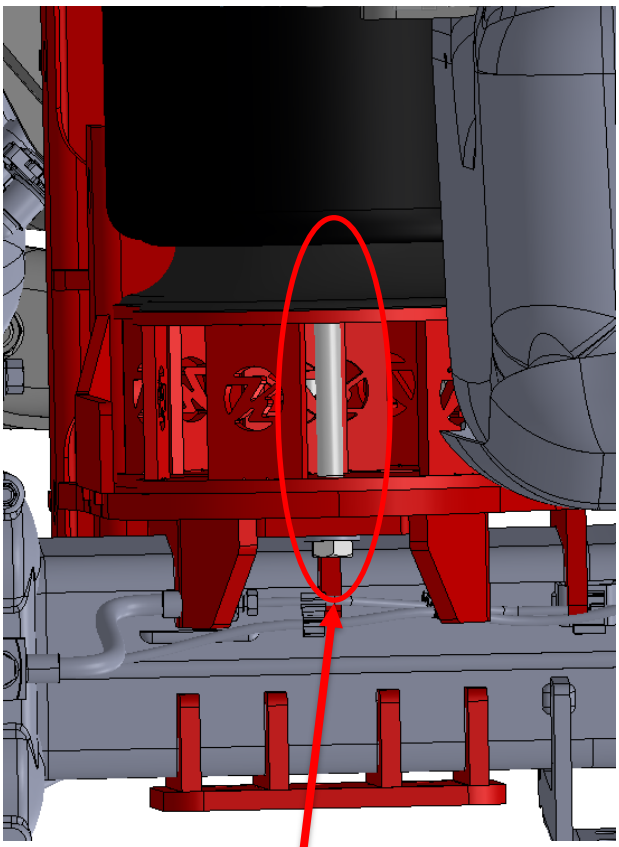





10. Locate the trailing arm bars (#52114.5), Cast Knuckles (#10005-RHT & 10006-LHT), Poly Hats (#80136) and Sleeves (#20093). Thread the knuckles onto the trailing arm bars. NOTE: The bars have both left- and right-hand thread so make sure to thread the correct knuckle. The trailing arm bar assembly install to the side plates with 7/8”-14 x 5-1/2” bolts, flat washers and lock nuts and lower bag mounts with 7/8”-14 x 5” bolts, flat washers and lock nuts.

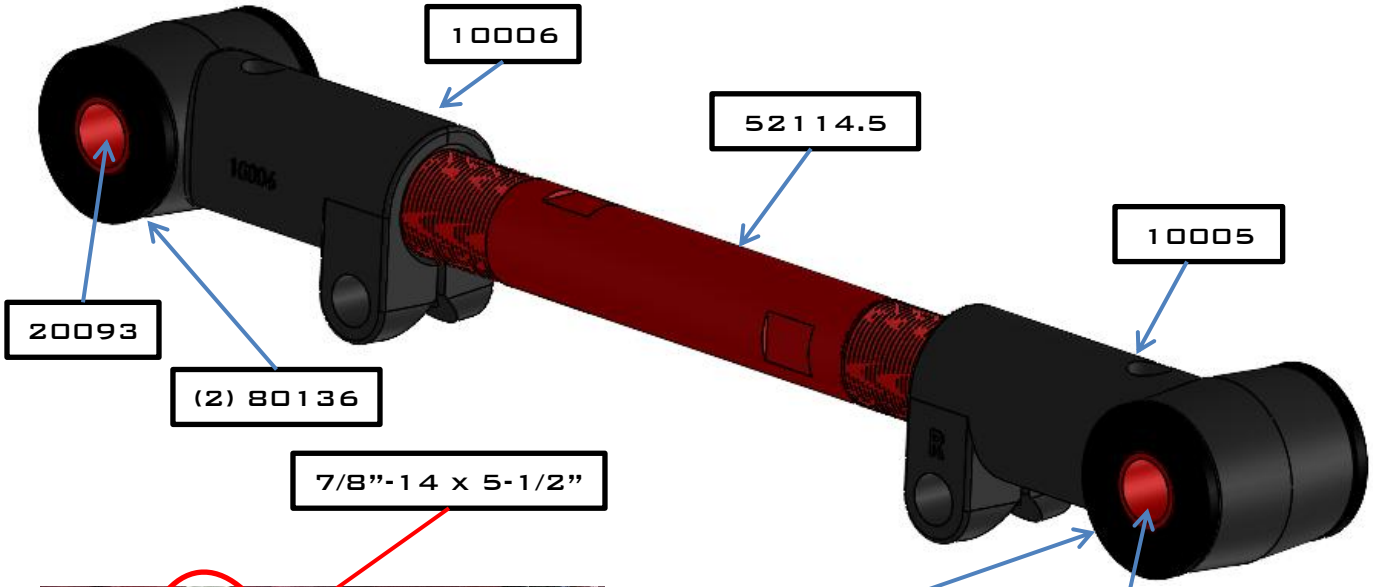

7/8”-14 x 5-1/2”

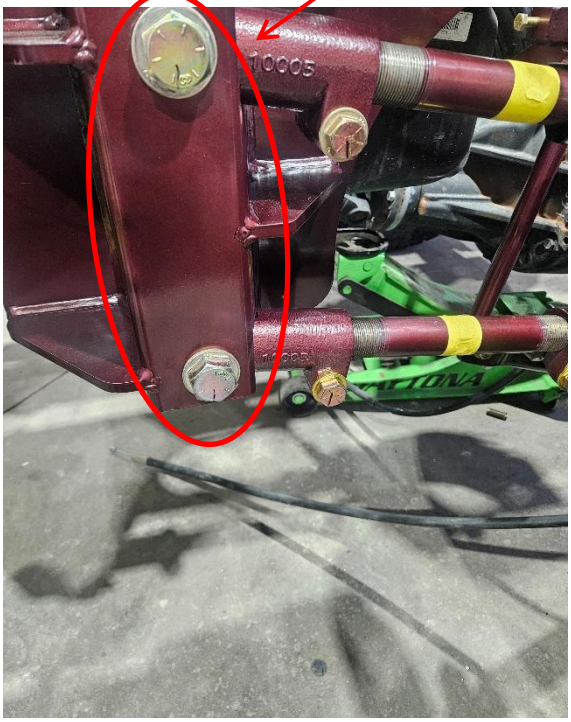

(2) 80136

20093

7/8”-14 x 5”

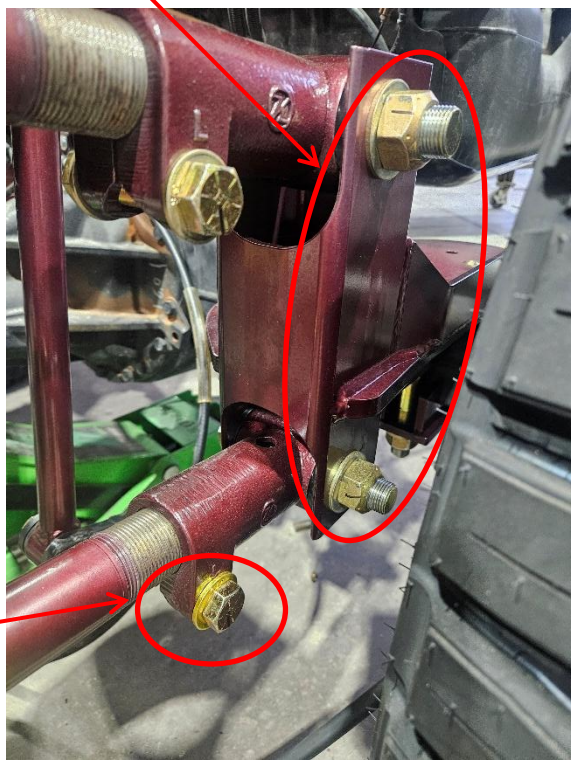

Install the (8) 5/8”-18 x 3” Pinch Bolts but don’t tighten up until the bars have been adjusted to match the pinion angle

11. Locate the Shock Mounts (#10045452) and Crush Bushings (#10045454). The shock mounts install to the factory location of the shock and sway bar on the axle. The crush bushing will go in between the factory shock location and fastens with the factory shock bolt.

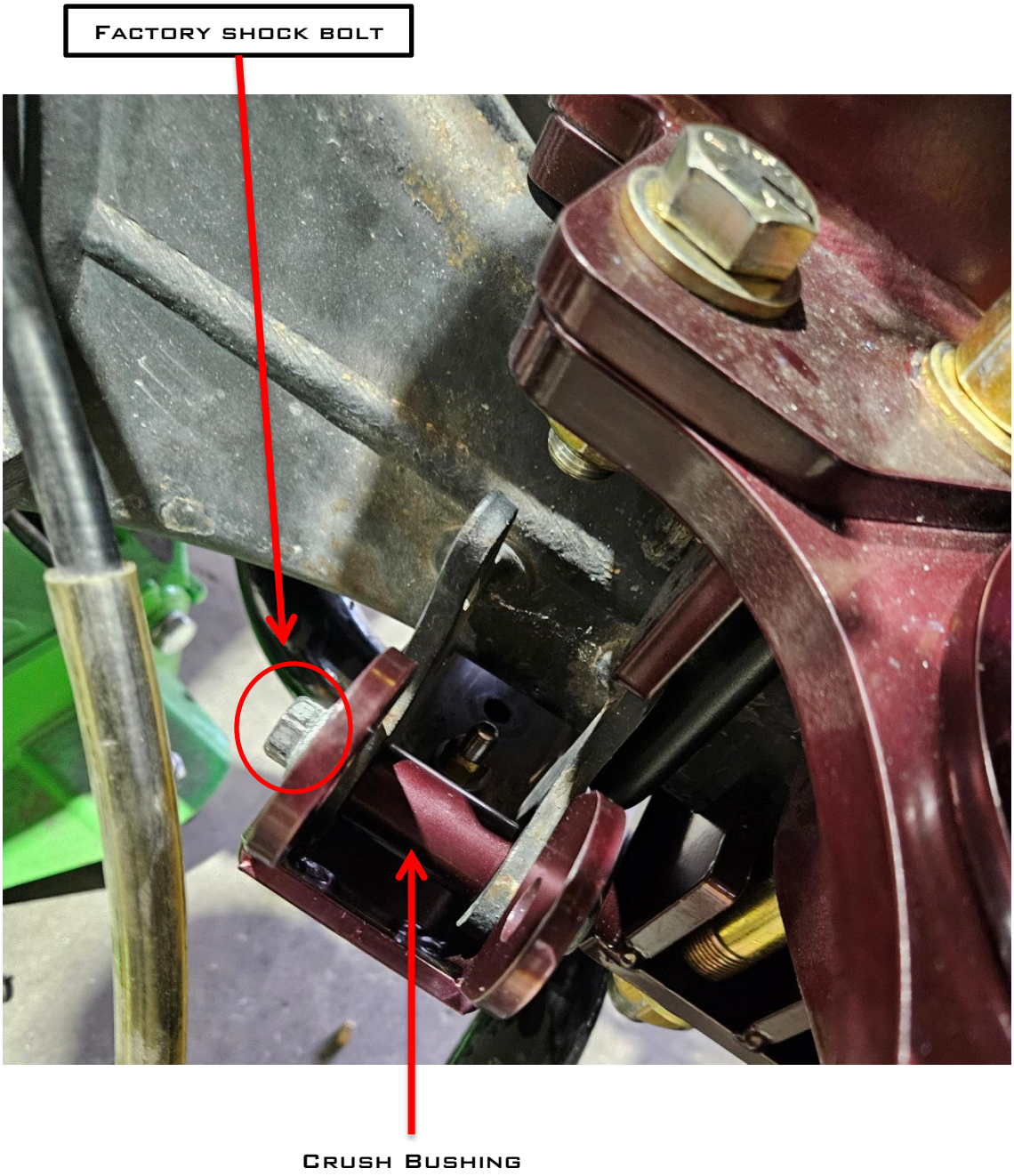

12. Locate the sway bar (#80079) and Bushing Kit (#4129-130KLD). Make sure to grease the bushings before installing to the sway bar. Place the bushing similar to what is shown below and then place D Ring over the bushing and attach The sway bar with 3/8”-24 x 2” bolts, flat washers and lock nuts.

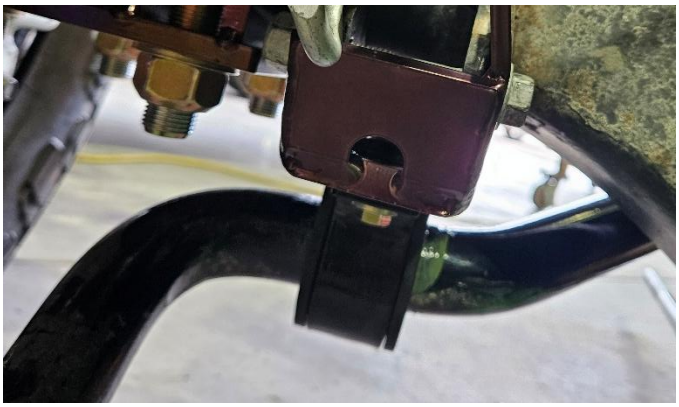



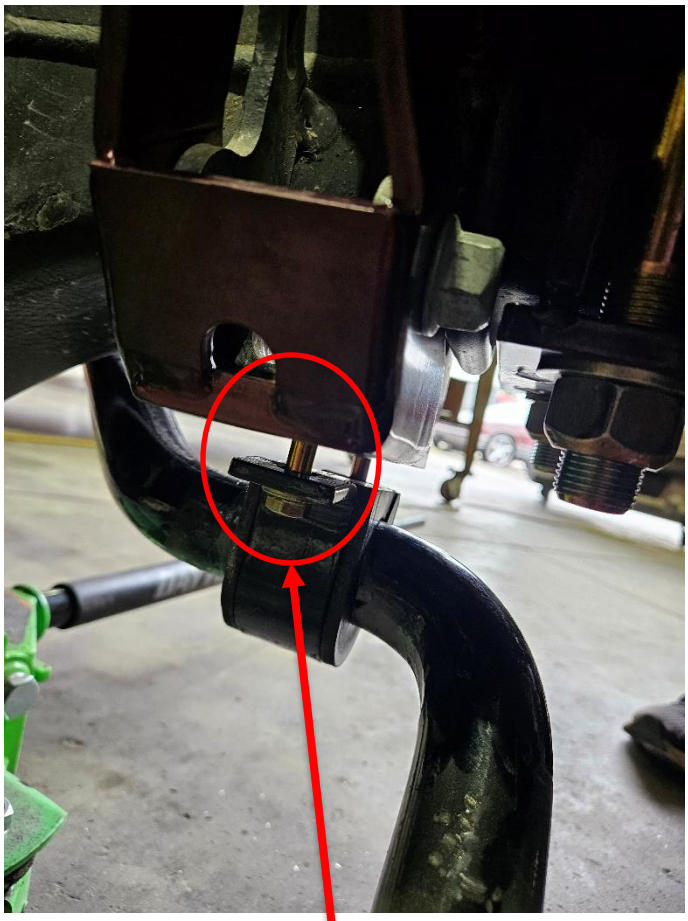



13. Locate the End Links (#19139) and Spacers (#11551). The end links attach to the factory end link mounts with ½-20 x 2-1/2" bolts, flat washers and lock. The lower portion of the end link will attach to the sway bar with ½"-20 x 3" bolts, flat washers and lock nuts. The spacer will go on the inside of the end link that faces the centerline of the truck.

Spacer

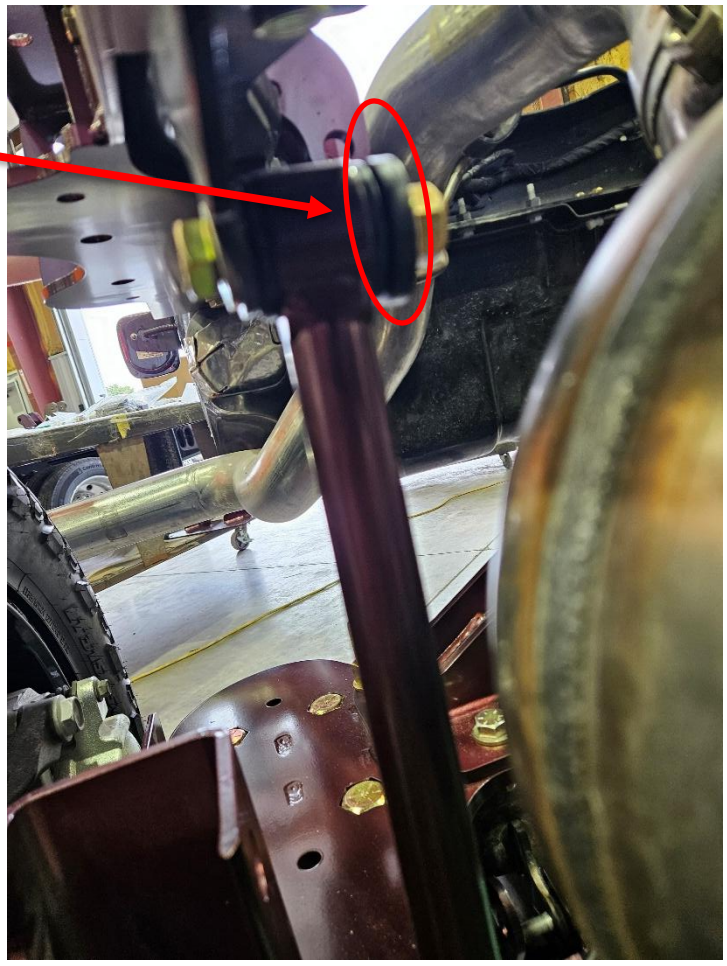



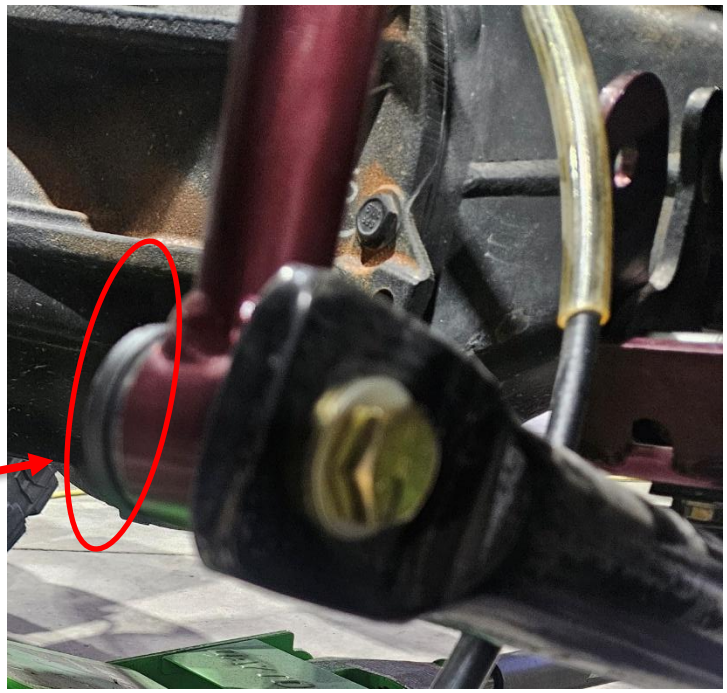

Spacer

14. Locate the Shocks (#RAP-10158). The shocks install to the factory location on the upper and to the shock relocation mount on the lower. The upper shock location fastens with the factory bolts, and the lower location fastens with ½"-20 x 3-1/2" bolts, flat washers and lock nuts.

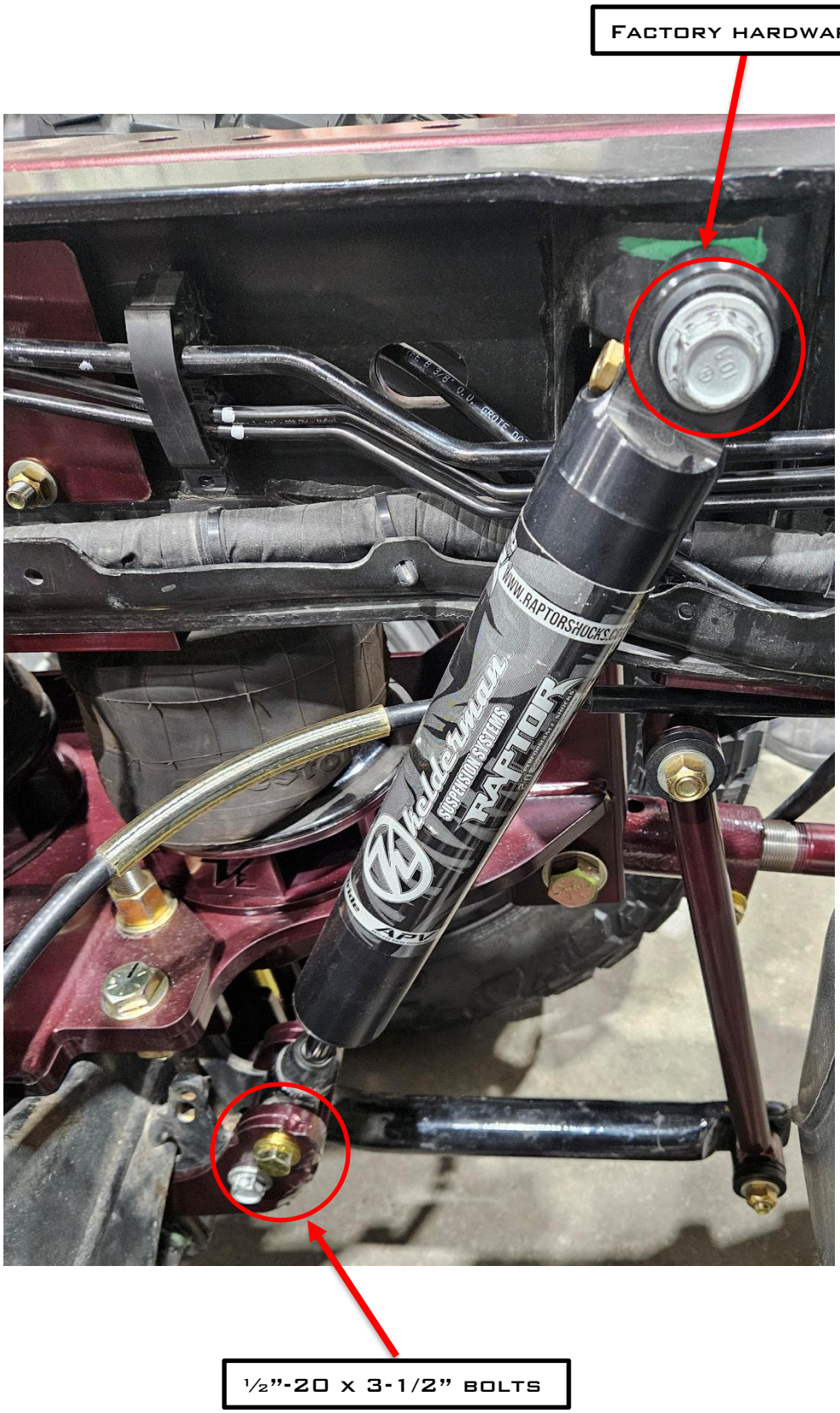

15. Re-attach the E-Brake Cables to the E-Brake Mount on the driver's side. The drivers side e-brake cable feeds through the smaller outside hole. The passenger side e-brake cable will go through the inside larger hole.

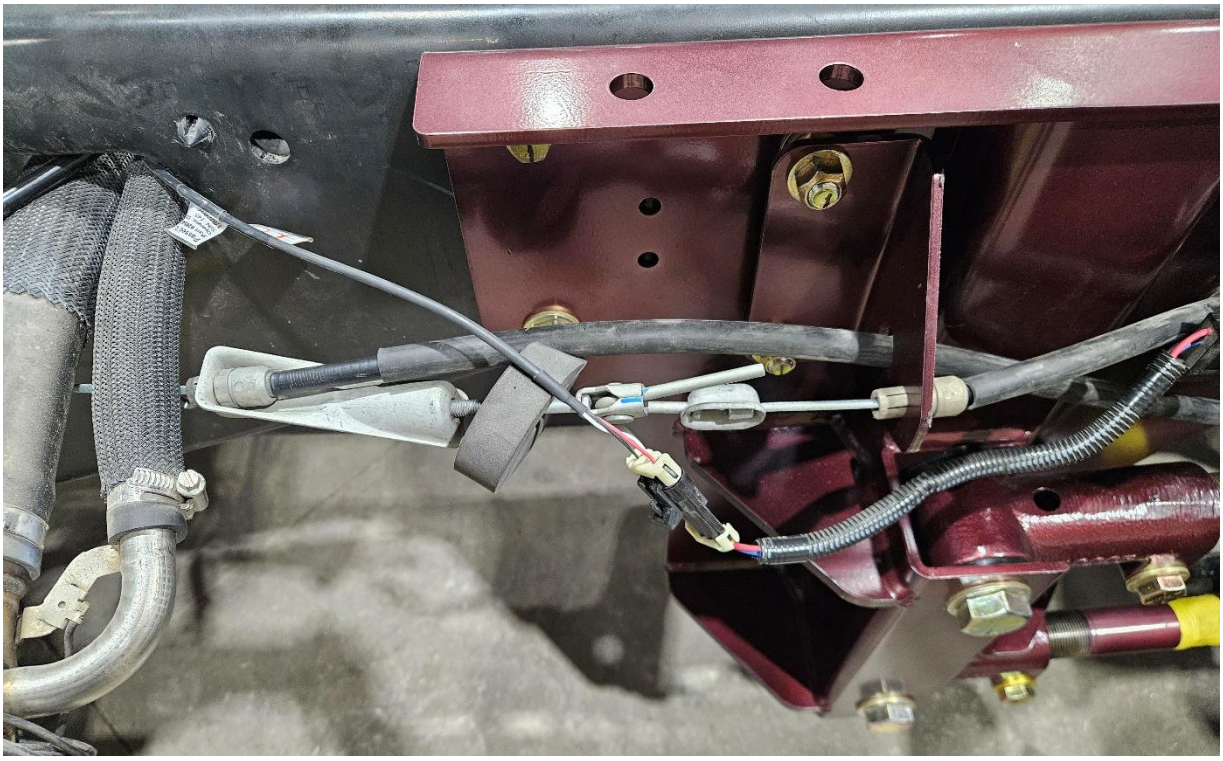

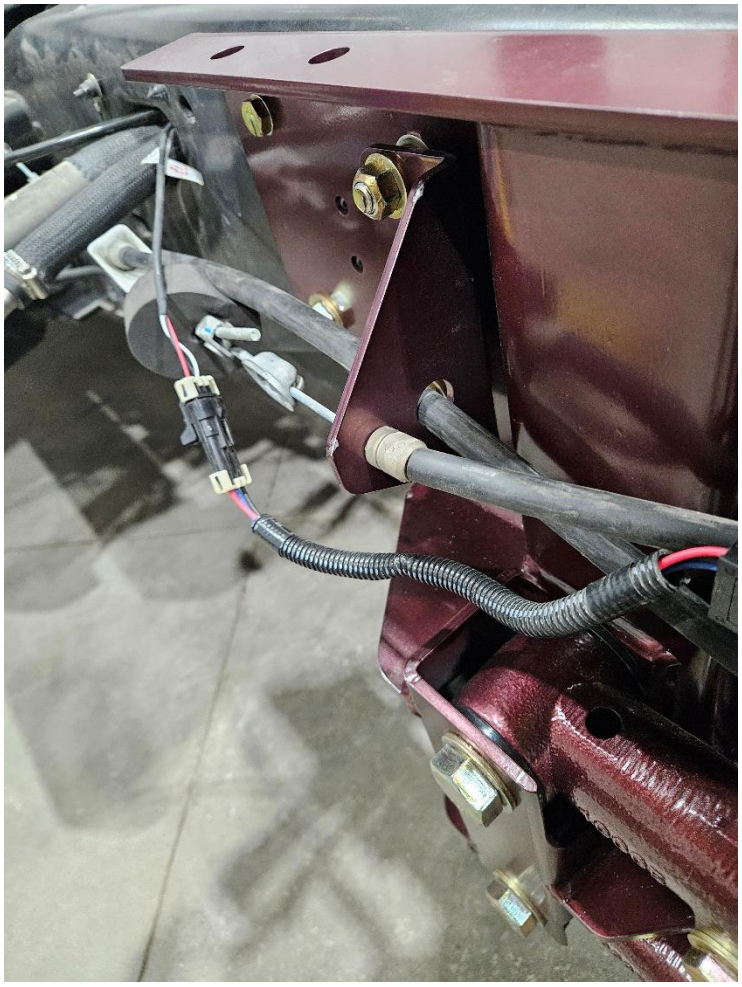

Fasten E-Brake cable bracket to mount on the front of the Watt Link Crossmember



16. Locate the Sensor, the sensor arm, 6” linkage and collars with ball studs. When install the sensor its best practice to have the sensor arm as level as possible at ride height. The collar should be perpendicular to the sensor arm.

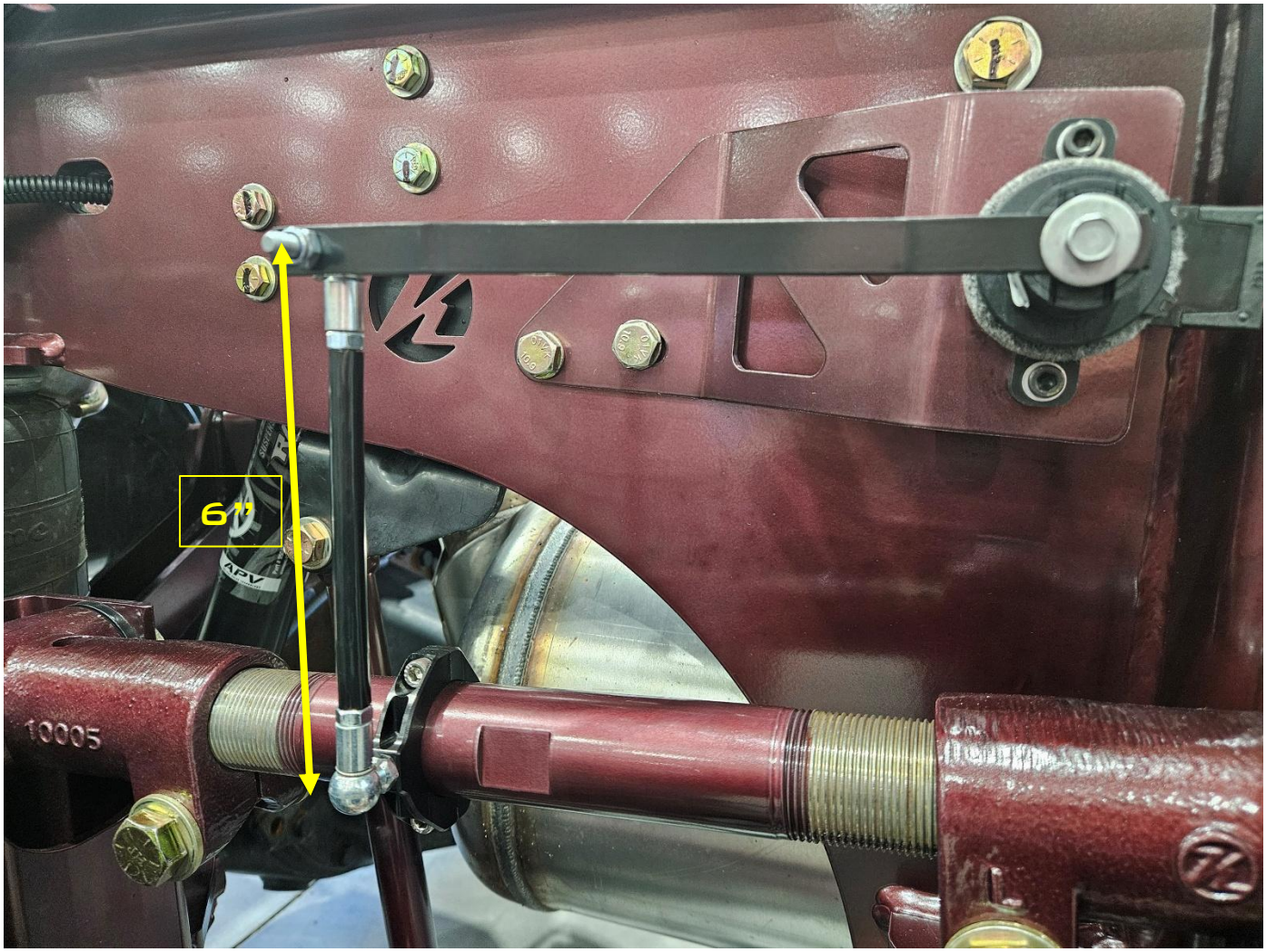

17. Locate the Carrier Bearing Shims. The quantity of shims used depends on the pinion angle, but the three shims will most frequently be used.

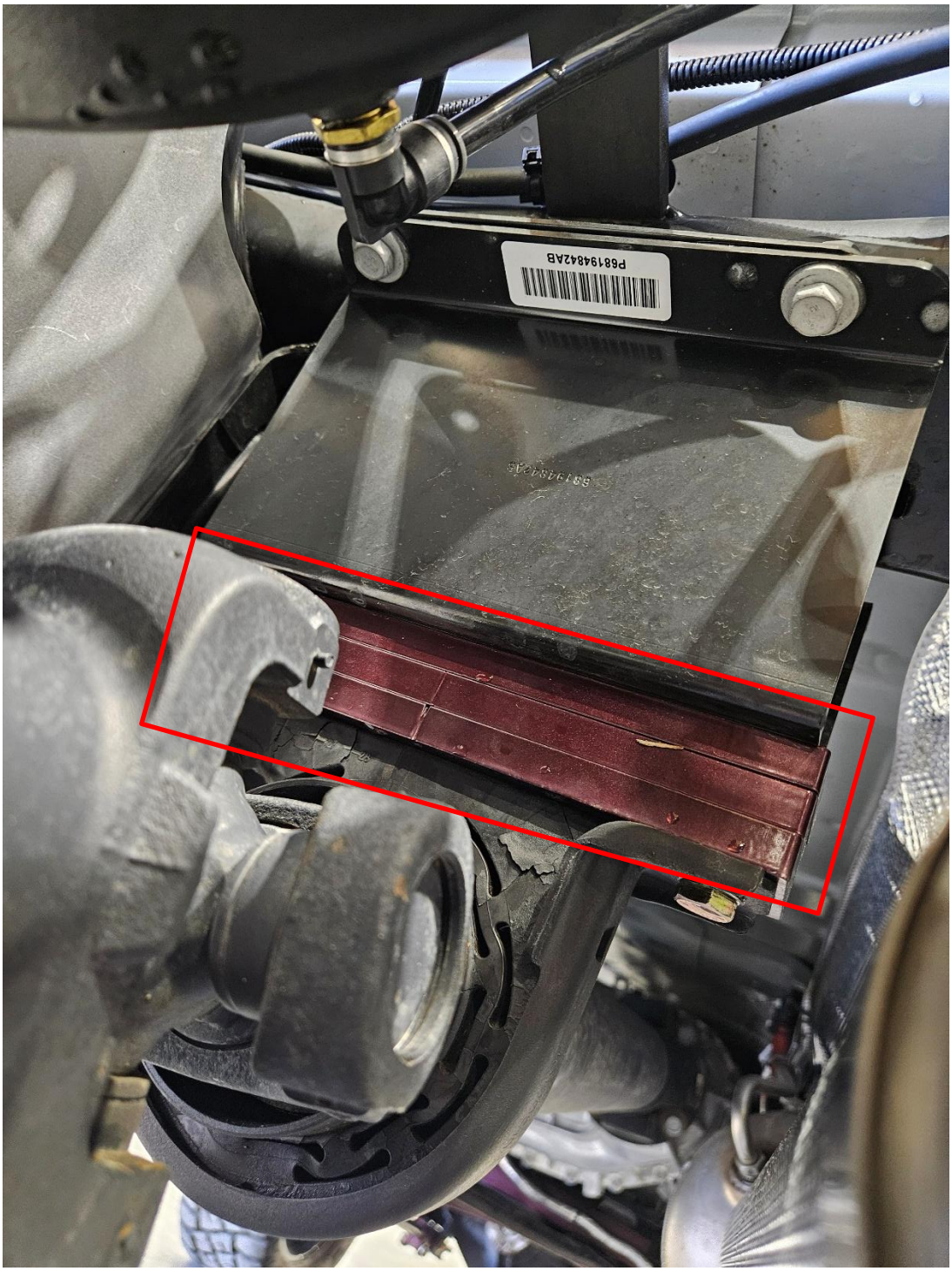

18. The air bags will use ¼” PTC 90° Fitting on each bag. The fittings should face towards the rear of the truck. The two fittings will feed into a Tee that goes through the opening on the side plate.

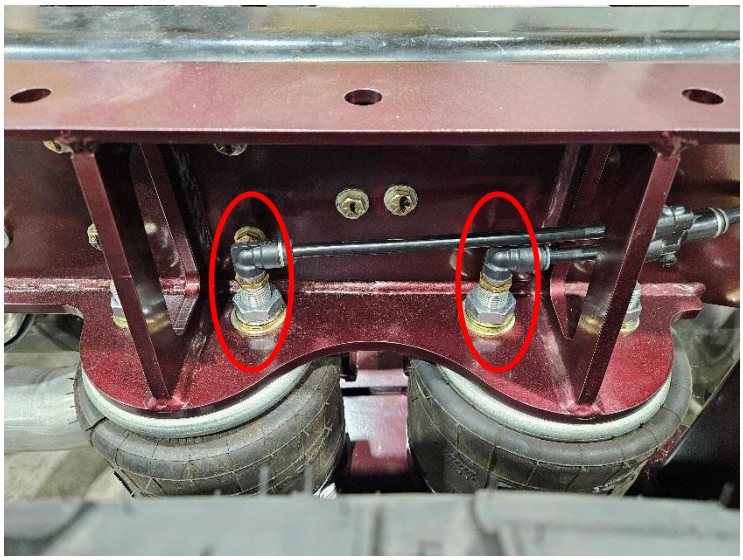



Single hose tees off into one before feeding through the side plate.

Best practice to run the air Hose inside the crossmember to keep the hose away from moving parts

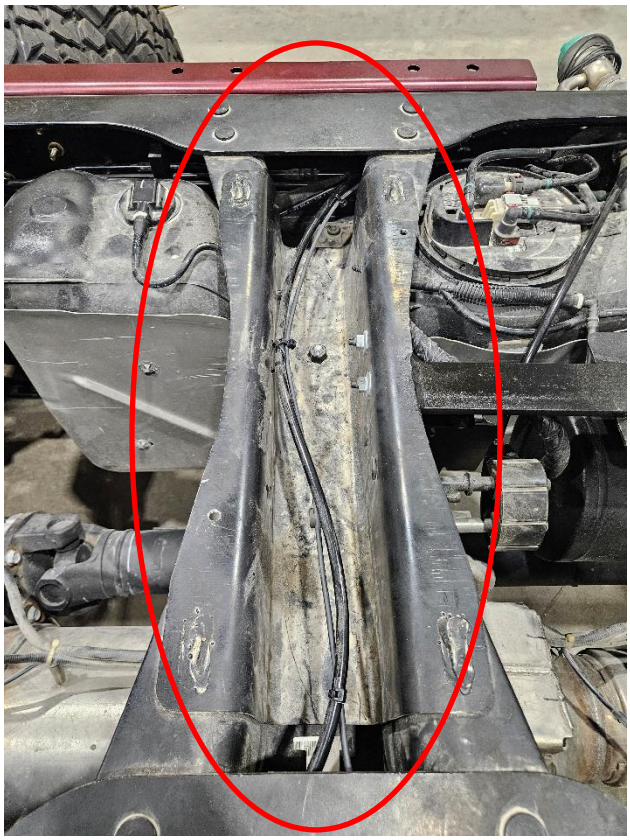

KIT DRAWINGS

ITEM NO.	PART NUMBER	DESCRIPTION	QTY.
1	10005	PURCHASED PARTS - CAST TRAILING ARM KNUCKLE (RHT) (1-1/2"-12 UNF)	4
2	10006	PURCHASED PARTS - CAST TRAILING ARM KNUCKLE (LHT) (1-1/2"-12 UNF)	4
3	10009346	WELDMENT - 3.50" LOWER BAG RISER	4
4	10010479	WELDMENT - EXHAUST HANGER	1
6	10041870	WELDMENT - (PS) UPPER BAG MOUNT	1
7	10041884	WELDMENT - (DS) LOWER BAG MOUNT	1
8	10041898	WELDMENT - (PS) LOWER BAG MOUNT	1
9	10041916	WELDMENT - (PS) UPPER BAG MOUNT	1
10	10042028	WELDMENT - (DS) UPPER WATTS LINK MOUNT	1
11	10042035	CRR - 1.25"OD X .75"ID X 8.5"L - 3/4"-16 INTERNAL THREAD	2
12	10042044	WELDMENT - (PS) UPPER WATTS LINK MOUNT	1
13	10042127	CRR - CENTER PIVOT WATTS LINK	1
14	10042132	PLATE - CORNER BRACE (PS)	1
15	10042146	PLATE - 1.50"OD X .531" ID X .25"THK	1
16	10042147	PLATE - CORNER BRACE (DS)	1
17	10042149	PLATE - KEEPER FLAG	1
18	10042151	WELDMENT - WATT LINK CROSSMEMBER	1
19	10045452	WELDMENT - SHOCK EXTENSION	2
20	10045454	DOM - CRUSH BUSHING - 1"OD X 5/8"ID X 1-11/16"L	2
21	10045459	PLATE - BRAKE LINE MOUNT	1
22	10045510	PLATE - (DS) SENSOR BRACKET	1
23	10045511	PLATE - (PS) SENSOR BRACKET	1
24	10045623	PLATE - E-BRAKE MOUNT	1
25	10045697	PLATE - CARRIER BEARING SHIM 0.50"	3
26	10045708	WELDMENT - WATT LINK	1
27	10045717	FK ROD END 3/4-16 - 5/8" BORE - PTFE LINED - RH	2
28	10045718	FK ROD END 3/4-16 - 5/8" BORE - PTFE LINED - LH	2
29	10045736	WELDMENT - RAM 4500/5500 CC AXLE CLAMP	2
30	10046322	PLATE - BRAKE LINE MOUNT	1
31	10046337	CRR - BOLT SPACER	2
32	11550	CRR - SLEEVE BUSHING - .750"OD X .511"ID - 1.375"L	4
33	13208	JAM NUT RHT - 3/4"-16 - GR5 - Z	2
34	13209	JAM NUT LHT - 3/4"-16 - GR5 - Z	2
35	19139	WELDMENT - 15.00" END-LINK	2
36	20093	DOM - 1.125" OD X .880" ID X 3.00" LENGTH - TRAILING ARM KNUCKLE REDUCER/SLEEVE	8
37	4129-130KLD	KIT - SWAY BAR BLUE BUSHING KIT (PAIR) - ROADMASTER	1
38	52114.5	TUBE - TRAILING ARM - 14.5" LONG - THREAD: EXTERNAL 1.5"-12	4
39	80012-5323	AIR BAG - FIRESTONE 5323	4
40	80079	SWAY BAR - 1.75" DIA - REAR - (ROADMASTER 580290-00) (1129-130KLD)	1
41	80134	PURCHASED PARTS - INSERT PRESS-IN BUSHING (END LINK) - 1.160"OD X .745"ID	8
42	80136	PURCHASED - POLY HAT BUSHING - 1.79"OD X 1-1/8"ID X 1-7/16"L	16
43	80456	BEARING - IGUS - GFI-2022-24	2
44	81583	BOLT KIT - 2025+ RAM 4500/5500 CAB CHASSIS - 6" LIFT REAR - OVERLANDER	1

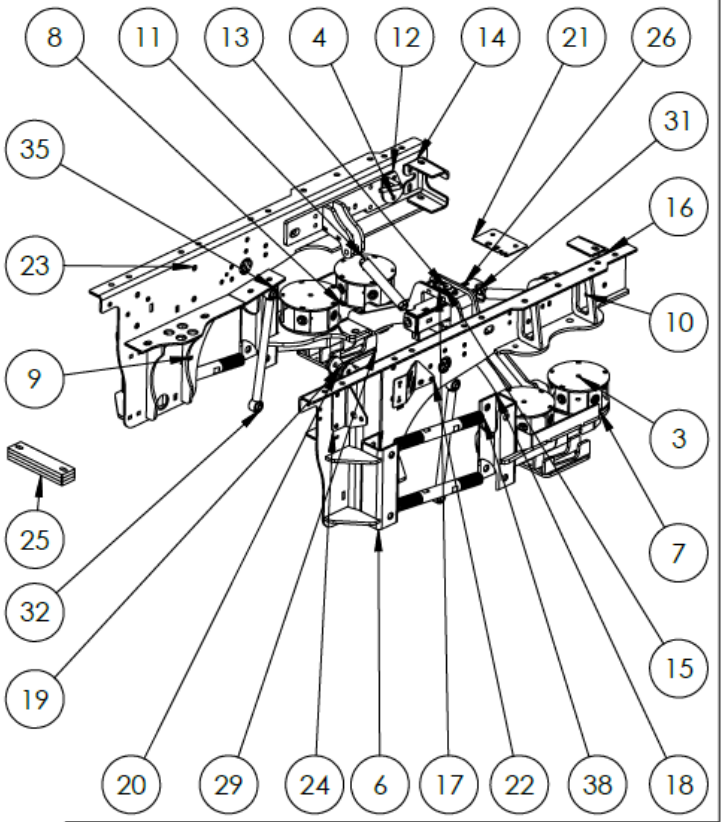

3RD ANGLE PROJECTION	A	DO NOT SCALE DRAWING	1:16	Approximate Weight =1676.33 lbs
UNLESS OTHERWISE SPEC. DIMNS. IN INCHES	MATL SPECS: Assembly			
	DESCRIPTION: Kit - 6" Lift Rear - Overlander			
STD. TOLERANCES X.X ±.060 X.XX ±.010 X.XXX ±.005 FRAC. DIM. ±1/32" Deg. ± .5°	PROJECT: 2025+ Ram 4500-5500 Chassis Cab			
	PART NUMBER: 10039931		NOTICE: THIS DOCUMENT AND ITS CONTENTS ARE THE PROPERTY OF KELDERMAN MFG. INC. NO USE OR COPIES MAY BE MADE WITHOUT WRITTEN PERMISSION FROM KELDERMAN	
	DESIGN BY:	DATE: 11/18/2026		SHEET 2 OF 2

REVISION: A

30

11/18/2026

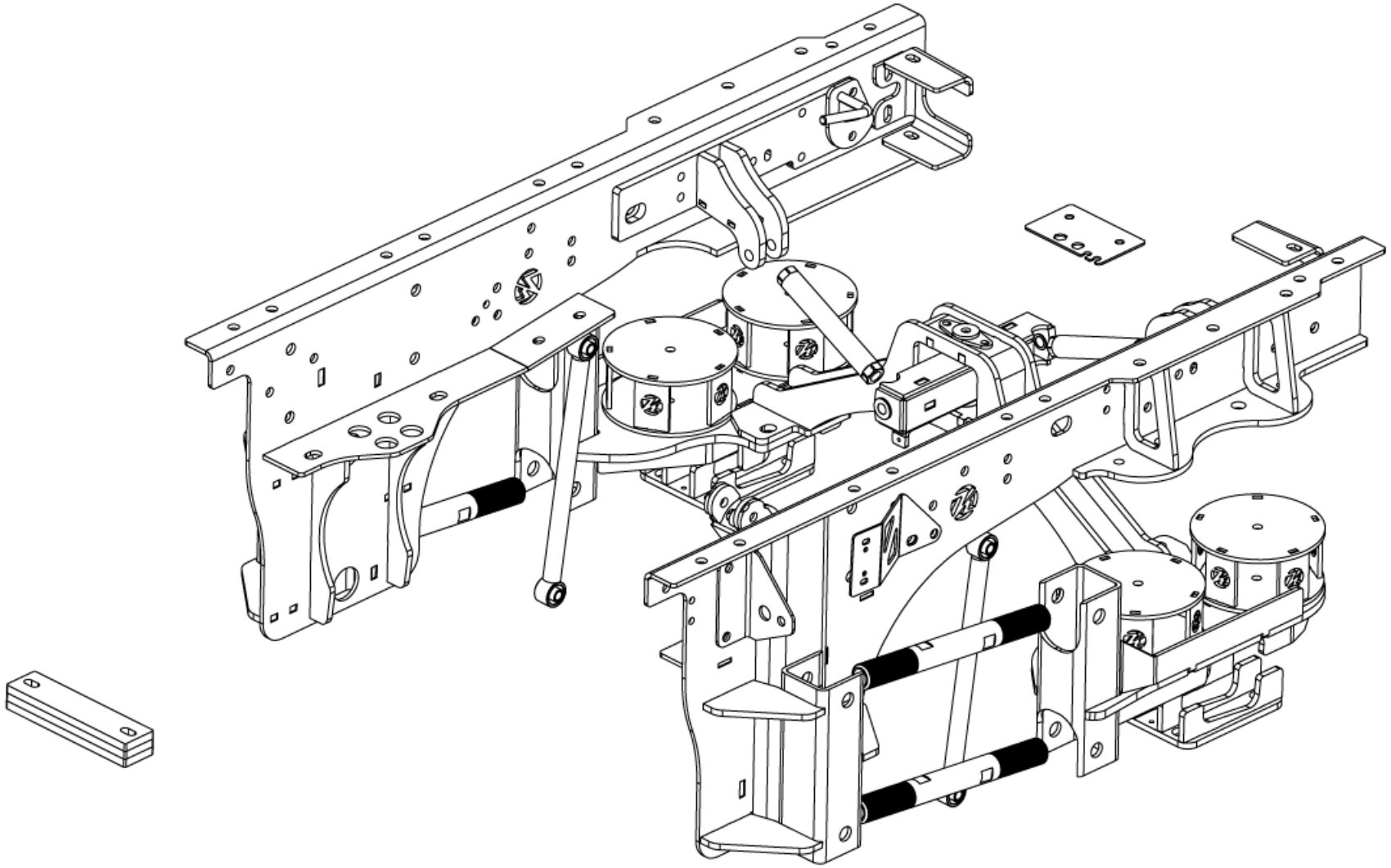

3RD ANGLE PROJECTION	A	DO NOT SCALE DRAWING	1:16	Approximate Weight =1676.33 lbs
UNLESS OTHERWISE SPEC. DIMNS. IN INCHES	MATL SPECS: Assembly			
	DESCRIPTION: Kit - 6" Lift Rear - Overlander			
STD. TOLERANCES X.X ±.060 X.XX ±.010 X.XXX ±.005 FRAC. DIM. ±1/32" Deg. ± .5°	PROJECT: 2025+ Ram 4500-5500 Chassis Cab			
	PART NUMBER: 10039931		NOTICE: THIS DOCUMENT AND ITS CONTENTS ARE THE PROPERTY OF FELDERMAN MFG. NO USE OR COPIES MAY BE MADE WITHOUT WRITTEN PERMISSION FROM FELDERMAN	SHEET 1 OF 2
	DESIGN BY:	DATE: 11/18/2026		

REVISION: A

31

11/18/2026

NOTES

Contact Information

Kelderman Manufacturing appreciates your business. We strive to meet the needs of our cus- tomers by providing the highest quality products. If you have any questions concerning our products, please call or email us at the following:

2686 Highway 92
Oskaloosa, Iowa 52577
Phone: 1-800-334-6150
Email: info@kelderman.com

SCAN ME

SCAN QR CODE FOR KELDERMAN WARRANTY PAGE